1 Sender (name, address, country)
Expéditeur (nom, adresse, pays)

MAGNA

Magna PT B.V. & Co. KG
Hermann-Hagenmeyer-Str. 1, 74199 Untergruppenbach

INTERNATIONAL CONSIGNMENT
LETTRE DE VOITURE INTERNATIONALE

This carriage is subject notwithstanding any clause to thecontary, to the Convention on the Contact for the International Carriage of goods by road (CMR)

Ce Transport est sourmis, nonobstart toute clause contraire, a la convention relative au contract de transport international de marchandise par route (CMR)

2 Consignee (name, address, country)
Destinataire (nom, adresse, pays)

VALMET AUTOMOTIVE Oy
AUTOTEHTAANKATU 14
FI-23500 UUSIKAUPUNKI

16 Carrier (name, address, country)
Transporteurs (nom, adresse, pays)

SCHENKER

MMA TRASPORTI s.r.l.s.
Sede Legale: Via Filippo Turati, 13
80046 SAN GIORGIO A CREMANO (NA)
Sede Operativa: Via Filichito, 31
80013 CASALNUOVO DI NAPOLI (NA)
Cod. Fisc. e Part. IVA 08222311212
Iscr. Albo NA-6616753-P

3 Place of delivery of the goods (place, country)
Lieu prévu pour la livraison de la marchandise

Place / Lieu: **UUSIKAUPUNKI**

Country / Pays: **Finnland**

17 Successive carriers (name, address, country)
Transporteurs successifs (nom, adresse, pays)

4 Place of receipt of the goods
Lieu et date de la prise en charge de la machandise

Magna PT S.p.A.
Via dei Ciclamini 4 70026
Modugno

Place / Lieu: **Modugno (BARI)**

Date / Date: **15.02.2023**

18 Carrier's reservations and observations
Réserves et observations des transporteurs

5 Attached documents
Documents annexés

Warenbegleitschein-Nr.: 291350

6 Marks and numbers / Marques et numéros
7 Number of packages / Nombre des colis
8 Method of packaging / Mode d'emballage
9 Nature of the goods / Nature de la marchandise
10 Statistic number / No. Statistique
11 Gross weight kg / Poids brut kg
12 Volume m³ / Cabage m³

Del.N/INV.	Reference	Cust./Int Part N.	Qty	UoM	No.Boxes	HU Description	Total/Net Wt.
7288922		A7003702600 2510001744-001	144	PC	18	Rack Daimler DCT300	13.320,000 10.188,000
					Total Boxes: 18		Total Wt.Kg/Net Wt.KG 13.320,000/10.188,000

Ref to Nr.9 / Nom voit No 9	Fees label number / Numéro d'optiquatto	UN Number / Numéro UN	Packaging Group / Group d'emballage

19 To be paid by / A payer par

	Sender / L'expediteur	Currency / Monnaie	Consignee / Le destinataire
Freight/Prix de transport			
Reduction/Réductions			
Subtotal/Solde			
Surcharges/Suppléments			
Incidental expenses/Frais			
Accessoires			
Various/Divers +			
Total to pay / Total a payer			

13 Sender's instructions (Customs and other formalities)
Instruction de l'expediteuer (formalites douanières et autres)

Container No:

Seal No:

14 Reimbursement/Remboursement

15 Directions as to freight payment
Prescription affranchissement

Free / Franko
Not free / Non Franco: Free carrier

20 Special agreements
Conventions particulières

21 Printed on / Etablie a: Modugno (BARI) MMA TRASPORTI 15.02.2023

22 *In nome e per conto del mittente*
MAGNA
Via dei Ciclamini 4
70026 Modugno (Bari)
Signature and stamp of the sender
Signature et timbre de l'expediteuer

23 DKF664
MMA TRASPORTI s.r.l.s.
Sede Legale: Via Filippo Turati, 13
80046 SAN GIORGIO A CREMANO (NA)
Sede Operativa: Via Filichito, 31
80013 CASALNUOVO DI NAPOLI (NA)
Cod. Fisc. e Part. IVA 08222311212
Iscr. Albo NA-6616753-P
Signature and stamp of the carrier
Signature et timbre de transporteur

24 Goods received / Réception des marchandises: Date / Date / gnle _____ 20____
Signature and stamp of the consignee
Signature et timbre du destinataire

25 Information to determine the tariff removal with border crossings

From	To	km

Palett sender / Expediteur des palettes

Type	Number	No exchange	Exchange
Euro-Pallet			
Box pallet			
Simple pallet			

Palett receiver / Destinataire des palettes

Type	Number	No exchange	Exchange
Euro-Pallet			
Box pallet			
Simple pallet			

26 Carriers contractor

27

	Off. Characteristic	Load capacity in KG
Car		
Trailer		

Receiver confirmation / date / signature

Driver confirmation / date / signature

Used Gen Nr

☐ National ☐ Bilateral ☐ EG ☐ CEMT

The framed rubrics with bold lines must be completed by freight carriers

The framed rubrics with bold lines must be completed by freight carriers

21 + 22 including 1 - 15

To be completed on the senders own responsibility

ADI 06.07

MAGNA

Magna PT B.V. & Co. KG
Hermann-Hagenmeyer-Str. 1, 74199 Untergruppenbach
VALMET AUTOMOTIVE Oy
WERK 601
ABLADESTELLE KA
AUTOTEHTAANKATU 14
23500 UUSIKAUPUNKI
FINNLAND

Delivery no. / Date:	7288922 / 15.02.2023
Purch. ord. no.:	5500001327
Purch. ord. Date:	
Supplier's no.:	16722084E
Order no. / Date:	30024847 / 27.01.2022
Customer no.:	10006320
Consignee:	30007879
Packager Int. Cons.:	
	01 Serie
Person in charge:	De-Tullio, Gina
Tel. no. / Fax:	

loading station: KA

Delivery note

Weights (gross/net)
Gross weight 13.320 KG Net weight 10.188 KG

30689

Item	Material Description	Quantity	Weight
000010	2510001744-001 Transmission System 7DCT300 Daimler M282 Customer article number: A7003702600 Serial no.: (700370260010790731, 700370260010790737, 700370260010790743, 700370260010790745, 700370260010790757, 700370260010790759, 700370260010790760, 700370260010790765, 700370260010790766, 700370260010790768, 700370260010790770 - 700370260010790785, 700370260010790787, 700370260010790788, 700370260010790795, 700370260010790797 - 700370260010790824, 700370260010790826 - 700370260010790839, 700370260010790841 - 700370260010790855, 700370260010790857 - 700370260010790862, 700370260010790865 - 700370260010790882, 700370260010790884, 700370260010790897 - 700370260010790903, 700370260010790905 - 700370260010790914, 700370260010790916 - 700370260010790925, 700370260010790927, 700370260010790928, 700370260010790930, 700370260010790931, 700370260010790935, 700370260010790936)	144 PC	10.188 KG
900001	TBA-500111 Rack Daimler DCT300	18 PC	3.132 KG

terms of dispatch: 03 Truck Forwarder

MAGNA

VALMET AUTOMOTIVE Oy
AUTOTEHTAANKATU 14
23500 UUSIKAUPUNKI

Doc. no. / Date
7288922 / 20.02.2023

terms of delivery: FCA VAT Warehouse Modugno (BA)

15/2/23

Rotondo, Giuseppe

Da: Bruno, Maria-Giovanna
Inviato: venerdì 10 febbraio 2023 12:10
A: Fiorentino, Ivana; Miglietta, Nicola; Rotondo, Giuseppe
Oggetto: schema di carico Valmet del 14/02 prenotato alle 16.30

ciao

Trailer no. 1 pickup at 16:30

Trailer 1

Loading Length	Loading Meters	Weight	Volume
6.75 m	5.90 m	13554.0 kg	34.99 m³

DEF-MT13 2.7.18 (Build 110)

A0 - VF13554, 1.35x1.2x1.2m 753.0kg

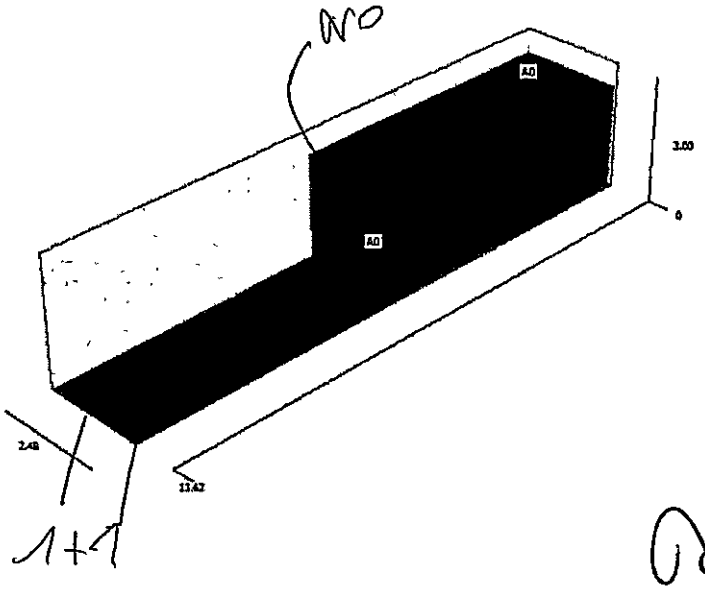

N.B.:
l'autista ci ha chiesto di portare indietro 2 Rack e sistemarli dietro a carico per maggiore stabilità.
Antonio Shenky

Maria Giovanna Bruno
Referent customer logistics & shipping, Transmission Systems
Magna Powertrain

Magna PT S.p.A
Via dei ciclamini, 4
IT-70026 Modugno (BA)
MOBILE +39 3487768493
maria-giovanna.bruno@magna.com
www.magnapowertrain.com
http://electrification.magna.com