GETRAG

Part Submission Warrant

Part Name: Speed Gear SR4 | Customer Part Number: 250.1.3876.35

Shown on Drawing No.: 250.1.3876.35 | Organization Part #:

Engineering Change Level: b C000288_MIP_1 | Dated: 25-mar-15

Additional Engineering Changes: | Dated:

Safety and/or Government Regulation ☑ Yes ☐ No | Purchase Order No.: | Weight (kg): 0.8880

Checking Aid No.: | Checking Aid Engineering Change Level: | Dated:

ORGANIZATION MANUFACTURING INFORMATION

GETRAG MODUGNO
Organization Name & Supplier/Vendor Code

VIA DEI CICLAMINI N°4
Street Address

MODUGNO BARI 70026 ITALY
City Region Postal Code Country

CUSTOMER SUBMITTAL INFORMATION

FORD (Fox)
Customer Name/Division

Buyer/Buyer Code

TYP 250
Application

MATERIALS REPORTING

Has customer-required Substances of Concern information been reported? ☑ Yes ☐ No ☐ n/a

Submitted by IMDS or other customer format:

Are polymeric parts identified with appropriate ISO marking codes? ☐ Yes ☐ No ☑ n/a

REASON FOR SUBMISSION (Check at least one)

- ☐ Initial Submission
- ☑ Engineering Change(s)
- ☐ Tooling: Transfer, Replacement, Refurbishment, or additional
- ☐ Correction of Discrepancy
- ☐ Tooling Inactive > than 1 year
- ☐ Change to Optional Construction or Material
- ☐ Supplier or Material Source Change
- ☐ Change in Part Processing
- ☐ Parts Produced at Additional Location
- ☐ Other - please specify below

REQUESTED SUBMISSION LEVEL (Check one)

- ☐ Level 1 - Warrant only (and for designated appearance items, an Appearance Approval Report) submitted to customer.
- ☐ Level 2 - Warrant with product samples and limited supporting data submitted to customer.
- ☑ Level 3 - Warrant with product samples and complete supporting data submitted to customer.
- ☐ Level 4 - Warrant and other requirements as defined by customer.
- ☐ Level 5 - Warrant with product samples and complete supporting data reviewed at organization's manufacturing location.

SUBMISSION RESULTS

The results for ☑ dimensional measurements ☐ material and functional tests ☐ appearance criteria ☐ statistical process package

These results meet all drawing and specification requirements: ☑ Yes ☐ NO (If "NO" - Explanation Required)

Mold / Cavity / Production Process

DECLARATION

I hereby affirm that the samples represented by this warrant are representative of our parts which were made by a process that meets all Production Part Approval Process Manual 4th Edition Requirements. I further affirm that these samples were produced at the production rate of ____ / ____ hours. I also certify that documented evidence of such compliance is on file and available for review. I have noted any deviations from this declaration below.

EXPLANATION / COMMENTS: **Identification groove introduction (only for FOX)**

Is each Customer Tool properly tagged and numbered? ☐ Yes ☐ No ☑ n/a

Organization Authorized Signature: | Date: 27/03/2015

Print Name: Camarda Ettore | Phone No.: tel 390805858220 | Fax No.:

Title: Area 1 Manager | E-mail: ettore.camarda@getrag.com

FOR CUSTOMER USE ONLY (IF APPLICABLE)

Part Warrant Disposition: ☑ Approved ☐ Rejected ☐ Other

Customer Signature: | Date: 27.03.15

Print Name: | Customer Tracking Number (optional):

GETRAG Production Part Approval

DIMENSIONAL TEST RESULTS

Organization:	GETRAG	Part Number:	250.1.3876.35
Supplier/Vendor Code:	GETRAG Modugno	Part Name:	SR4
INSPECTION FACILITY:		Design Record Change Level:	25/03/2015
NA		Engineering Change Documents:	b C000288_MIP_1

Organization Measurement Results (Data)

Item	Dimension/Specification	Specification / Limits		Test Date	Qty. Tested	1	2	3	4	5	controllo distruttivo	Ok	Not Ok
1	Larghezza gola	1.200	0.600		5	1.010	0.961	0.993	1.031	1.035		ok	
2	Distanza gola	86.600	85.400		5	86.202	86.200	86.192	86.234	86.072		ok	
3	Raggio gola	-	-		5	0.782	0.878	0.893	0.858	0.763		ok	
4	Profondità gola	0.450	0.150		5	0.160	0.156	0.150	0.153	0.155		ok	

SIGNATURE	TITLE	DATE
G. Russo	QPE	27/03/2015

GETRAG

Via dei Ciclamini 4, Modugno (BA)

Oggetto:	SR 4
Numero:	3876 PZ N 1
Operatore:	TURNO D
Data, ora:	27.03.2015, 16:13
Nota:	PART W
Tastatore:	PCV 350 / 33 mm
Macchina:	MOA 416120 002

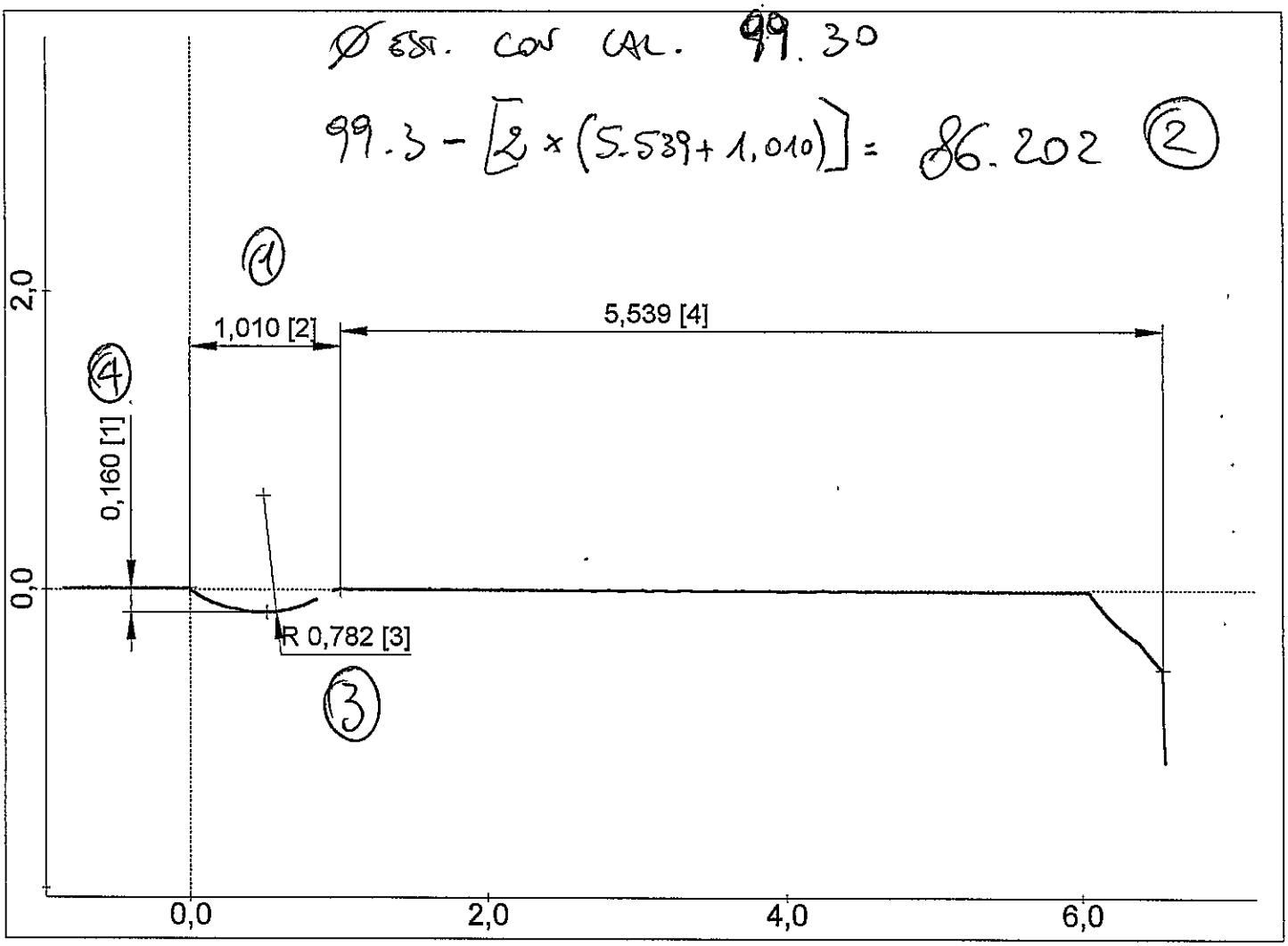

PERTHOMETER CONCEPT

Area Riservata alla Produzione	
Valutazione Profilo	
OK	☐
NOK	☐
N°BADGE ODP RICEVENTE	

GETRAG

Via dei Ciclamini 4, Modugno (BA)

Oggetto:	SR 4
Numero:	3876 PZ N 2
Operatore:	TURNO D
Data, ora:	27.03.2015, 16:13
Nota:	PART W
Tastatore:	PCV 350 / 33 mm
Macchina:	MOA 416120 002

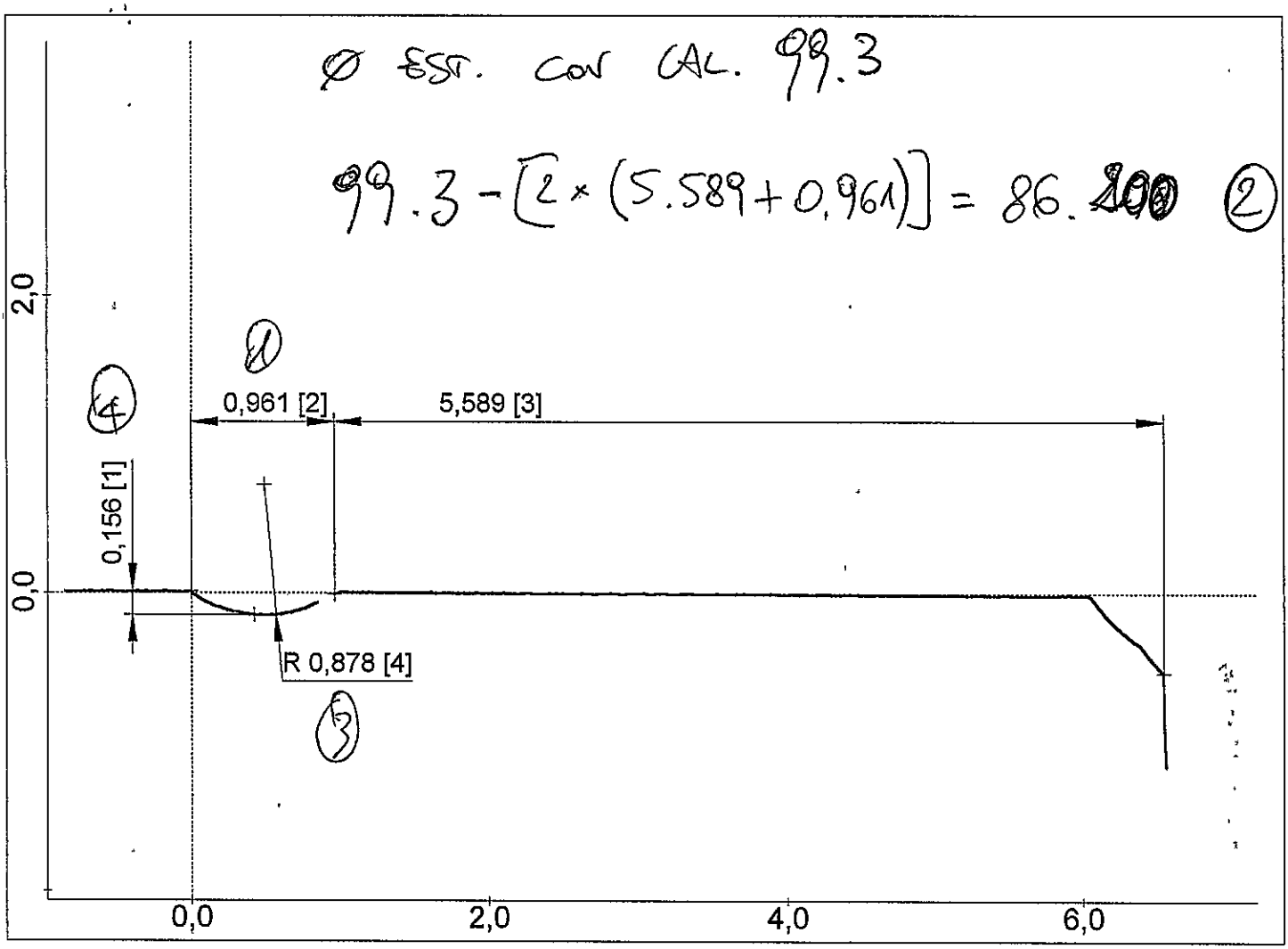

PERTHOMETER CONCEPT

Area Riservata alla Produzione	
Valutazione Profilo	
OK	☐
NOK	☐
N°BADGE ODP RICEVENTE	

GETRAG

Via dei Ciclamini 4, Modugno (BA)

Oggetto:	SR 4
Numero:	3876 PZ N 3
Operatore:	TURNO D
Data, ora:	27.03.2015, 16:13
Nota:	PART W
Tastatore:	PCV 350 / 33 mm
Macchina:	MOA 416120 002

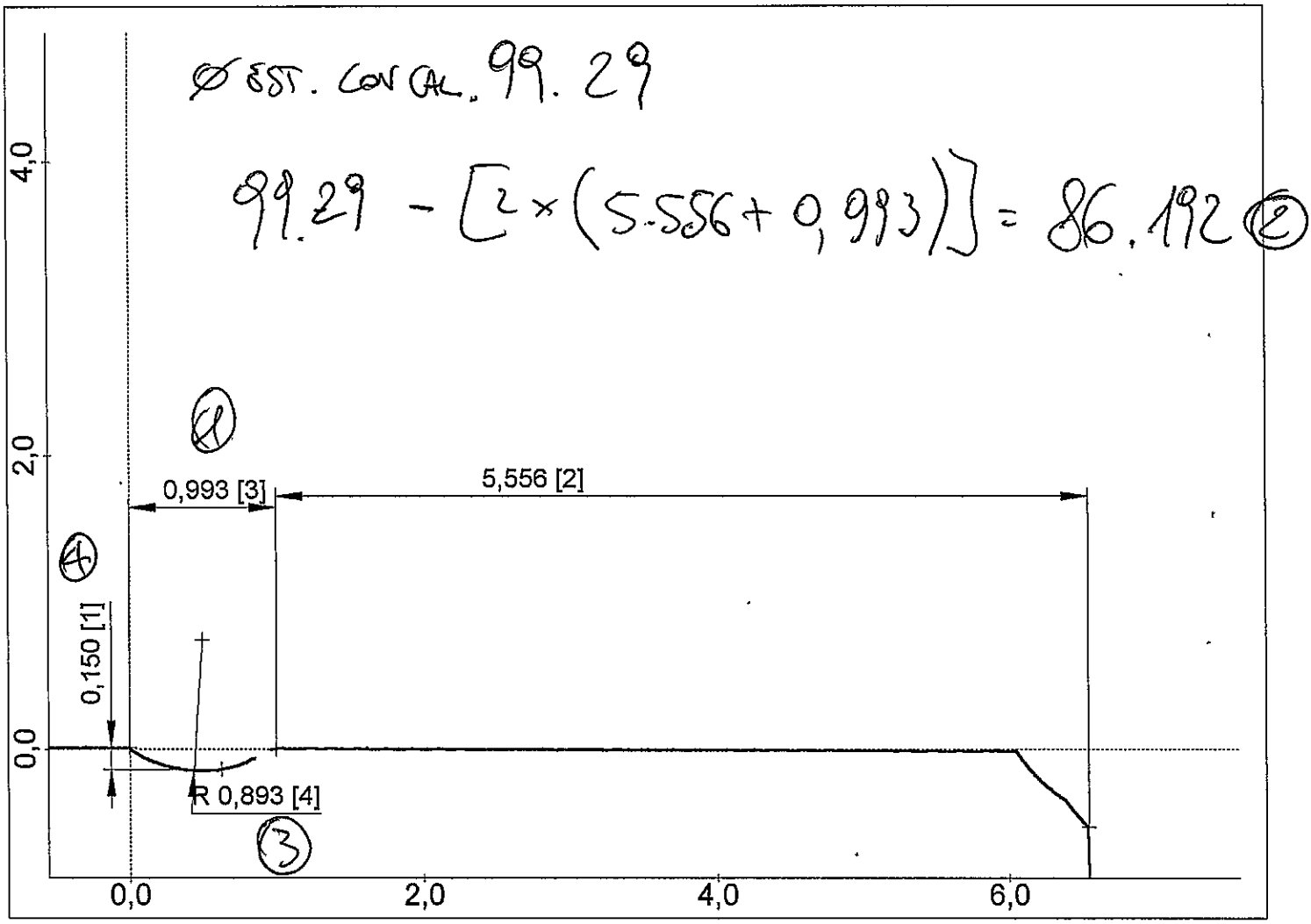

PERTHOMETER CONCEPT

Area Riservata alla Produzione

Valutazione Profilo

OK ☐

NOK ☐

N°BADGE ODP RICEVENTE

GETRAG

Via dei Ciclamini 4, Modugno (BA)

Oggetto:	SR 4
Numero:	3876 PZ N 4
Operatore:	TURNO D
Data, ora:	27.03.2015, 16:13
Nota:	PART W
Tastatore:	PCV 350 / 33 mm
Macchina:	MOA 416120 002

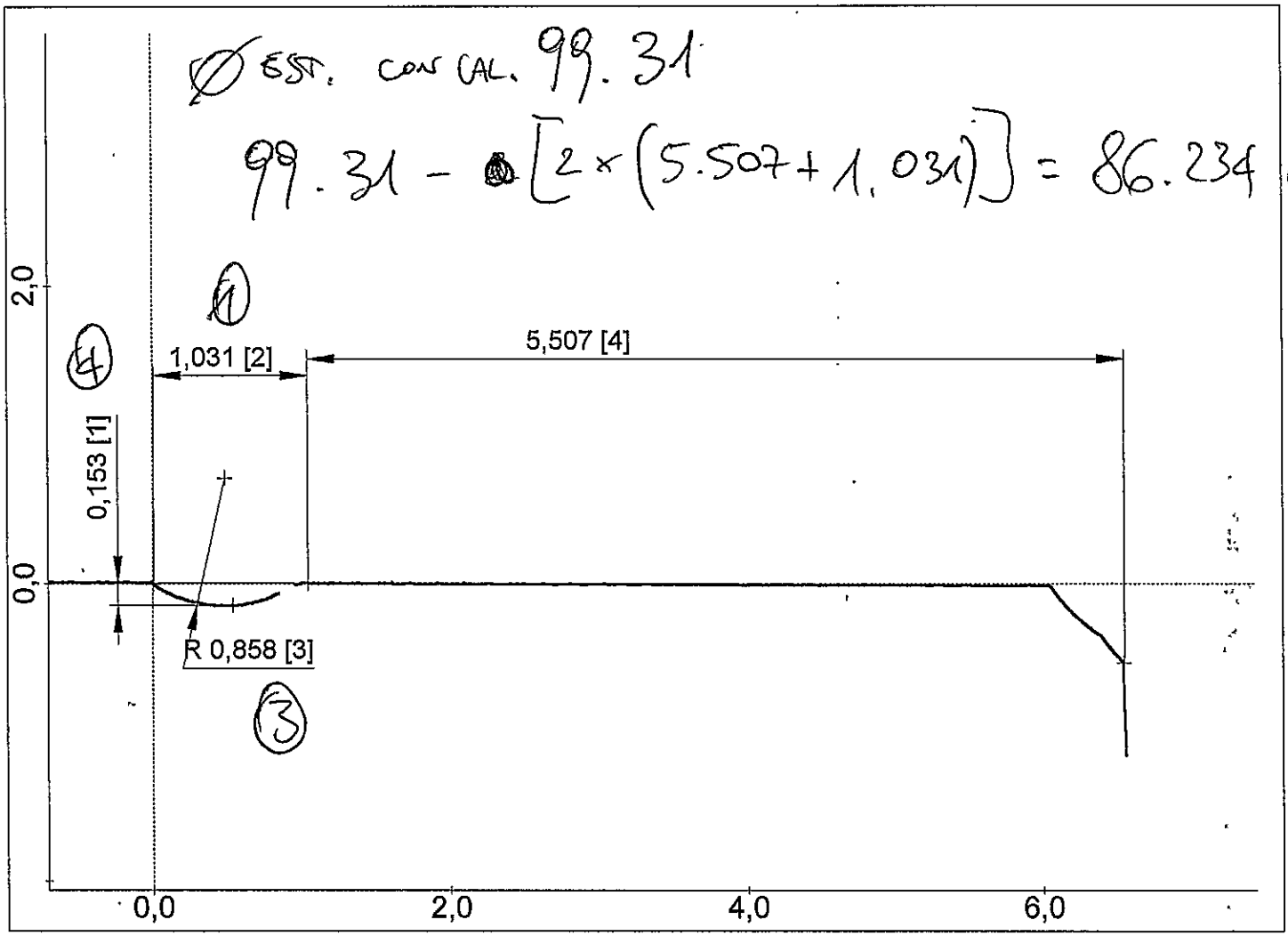

PERTHOMETER CONCEPT

Area Riservata alla Produzione

Valutazione Profilo

OK ☐

NOK ☐

N°BADGE ODP RICEVENTE

GETRAG

Via dei Ciclamini 4, Modugno (BA)

Oggetto:	SR 4
Numero:	3876 PZ N 5
Operatore:	TURNO D
Data, ora:	27.03.2015, 16:13
Nota:	PART W
Tastatore:	PCV 350 / 33 mm
Macchina:	MOA 416120 002

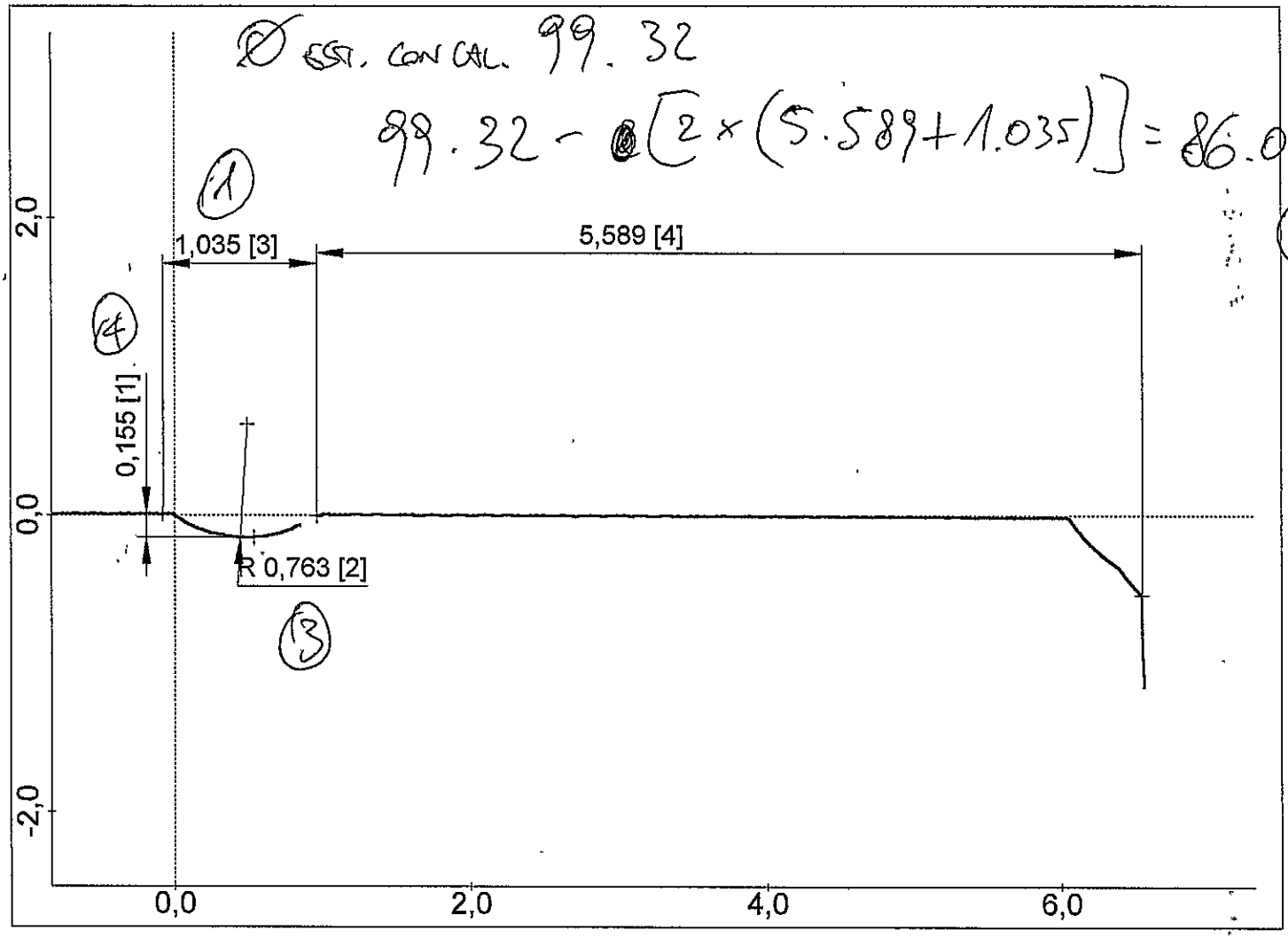

PERTHOMETER CONCEPT

Area Riservata alla Produzione	
Valutazione Profilo	
OK	☐
NOK	☐
N°BADGE ODP RICEVENTE	

Drawing 3876 update from index "a" to "b"					
Short description:	b	4x	0000288_MIP_	View W: Position neu/NEW: Ø86±0.6 war/WAS 4±0.3; (R) neu/NEW: 0.9±0.3 war/WAS 1.2±0.3; 0.3±0.15 war/WAS 0.15±0.05;	20150325
Id. groove implementation					

	PPAP Requirements	Required	Note	PPAP Docs updated
1	Design Records	Yes		YES
2	Authorized Engineering change documents	Yes	see dwg	YES
3	Customer Engineering approval	n.a.		
4	DFMEA	NO		
5	Process flow diagram(s)	NO		
6	PFMEA	Yes		YES
7	Control plan	Yes		YES
8	Measurement system analysis studies	NO		
9	Dimensional results	Yes		YES
10	Records of Material / Performance test results	NO		
11	Initial process studies	NO		
12	Qualified laboratory documentation	NO		
13	Appearance Approval Report (A.A.R.)	n.a.		
14	Sample Production Parts	Yes		YES
15	Master sample	Yes		YES
16	Checking aids	n.a.		
17	Customer-Specific Requirements	NO		
18	Part Submission Warrant (PSW)	Yes		YES

	Other requirements			
1	PSW Raw part	NO		
2	PSW E.P. part	NO		
3	PSW Engagement Rings	NO		

Design Release:	2015-03-28	Agapi.Raidt
Function Release:	2015-03-26	Alejandro.Mejia
Geardata Release:	2012-12-05	I.A. Holger.Paassen
Material Release:	not required	
SAP Release:	2015-05-06	Ruth.Ernstberger
Document Status:	approved	

Fuer Freigabeinformation freihalten! KEEP FREE FOR RELEASE INFORMATION!

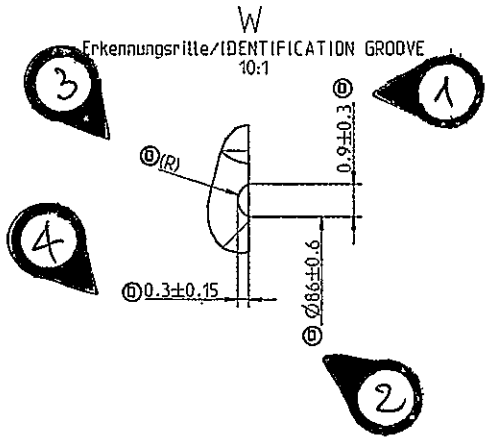

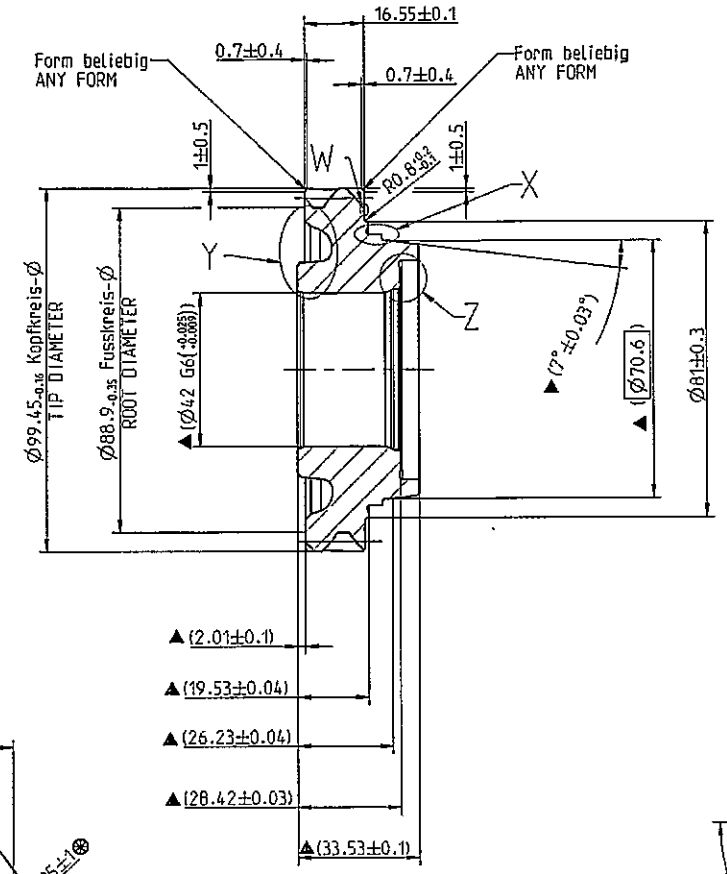

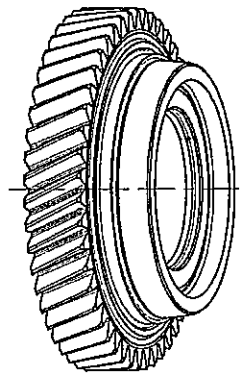

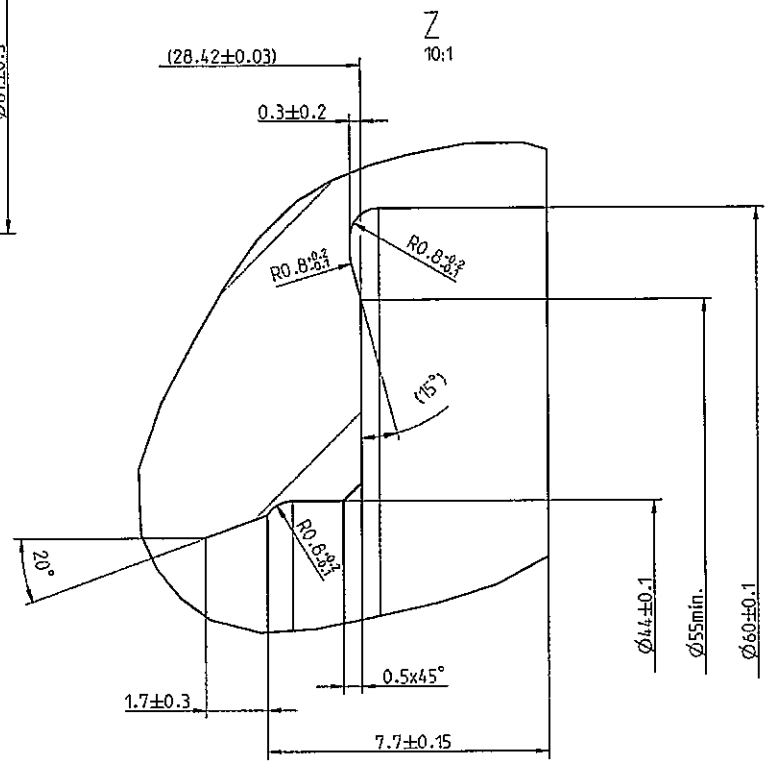

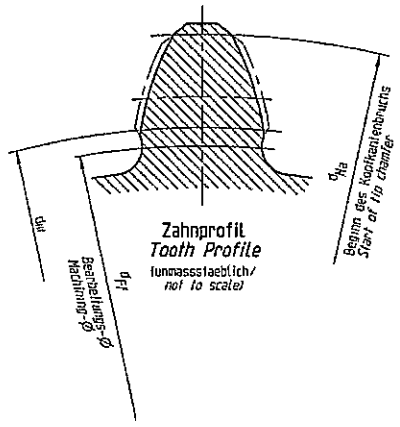

Kanten an Laufverzahnungen \ *Tooth chamfers*
unmassstaeblich \ *not to scale*

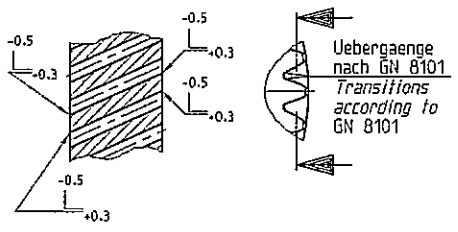

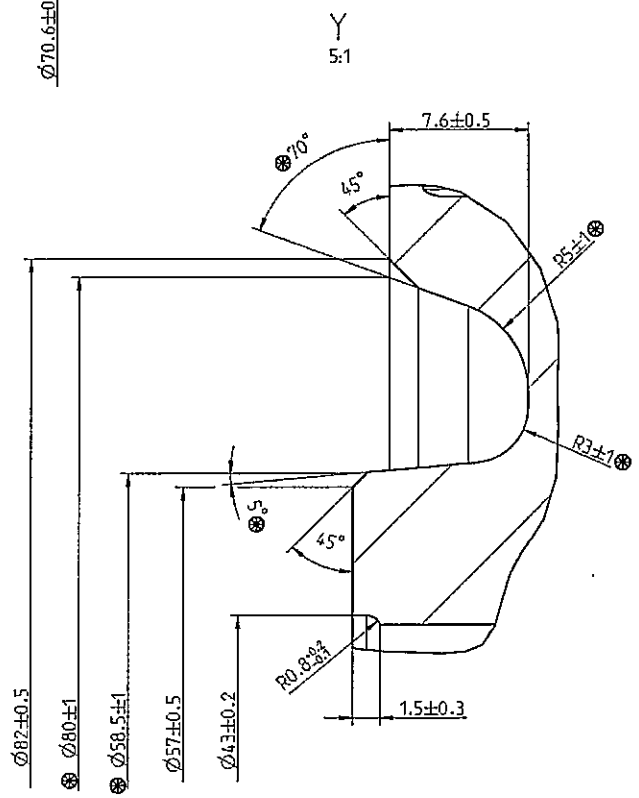

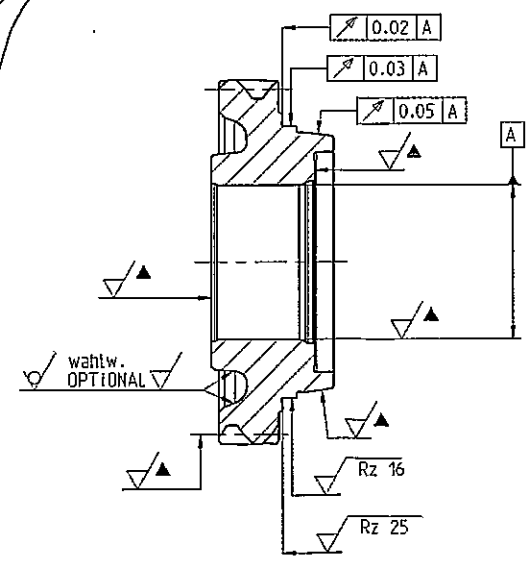

vorbearbeitet, Fertigmass ▲ (...)
siehe 250.1.3875.35
PREMACHINED. FINISHED DIMENSION ▲ (...)
SEE 250.1.3875.35

Naehere Angaben zur Verzahnung
siehe Verzahnungsblatt gleicher Nummer
FURTHER GEAR DATA SEE
DATA SHEET SAME NUMBER

Rz 40

Aussenverzahnung / EXTERNAL GEAR			
Zahnwelle/ SPLINE DATA EXTERNAL			
Bezugsdurchmesser / REFERENCE DIAMETER d_B			
Modul / NORMAL MODULE m_n		1.800	
Zaehnezahl / NUMBER OF TEETH z		47	
Eingriffswinkel / NORMAL PRESSURE ANGLE α_n		17.5°	
Schraegungswinkel / HELIX ANGLE β		24.0°	
Richtung / HAND OF HELIX		LEFT. links	
Bezugsprofil / BASIC RACK			
Profilverschiebung/ADDENDUM MODIFICATION $x \cdot m_n$	Nennmass / NOMINAL	1.149	
Qualitaet / GEAR TOLL QUALITY DIN3960		8	
Toleranzklasse / TOLERANCE CLASS			
Zahndicke / TOOTH THICKNESS s_n (Lehrenmass / BASE DIMENSION)	effective max.		
Zahndicke / TOOTH THICKNESS s_n (Einzelmessung / ACTUAL)	max.	3.474	
	min.	3.449	
Messkugel-Ø / BALL DIA D_M		2.50	a
Pruefmass / MEASUREMENT OVER BALLS M_{dn} (Einzelmessung / ACTUAL)	max.	96.375	a
	min.	96.303	a

⊛ Rohteilgeometrie
RAW PART GEOMETRY

Haerteangaben siehe
Schaltrad 4.Gg. vst. 250.1.3875.35
HEAT TREATMENT SEE
SPEED GEAR 4TH. CPL. 250.1.3875.35

GCG/TS 803001	0	<M>					
	0	▽				A	
GN 3010	0	<M>					
	0	<C>	b	4x	000088_HIP_	Item W: Position neu/NEW: Ø86±0.6 war/WAS 4±0.3. (B) neu/NEW: 0.9±0.3 war/WAS 1.2±0.3, 0.3±0.15 war/WAS 0.75±0.05;	20150325
	0	<A>	a	3x	35739	Verzahnungstabelle/GEAR DATA TABLE: Messkugel-Ø / BALL DIA: 2.5 war/WAS 3.0. Pruefmass / MEASUREMENT OVER BALLS. max. 96.375 war/WAS 98.302, min. 96.303 war/WAS 98.237	20120705
CAD Fuer Testzwecke			--	--	250/5150.1	Spezifikationsstellegrad 3 erteilt SPECIFICATION MATURITY LEVEL 3 APPROVED	20120214

Massstab / SCALE	Buchst. CHANGE INDEX	Aenderungsnummer CHANGE REQUEST NO.	Aenderung --nur mittels CAD zulaessig, FMEA ueberpruefen-- MODIFICATION --ONLY ALLOWED BY CAD, CHECK FMEA--	Datum DATE
M: 1.1 (--)				

Allgemeintoleranzen fuer Laengenmasse, Form und Lage ISO 2768 - mH
gebrochene Kanten, Radien und Winkelmasse ISO 2768 - v
GENERAL TOLERANCES FOR LINEAR DIMENSIONS, FORM AND POSITION ISO 2768 - mH, CHAMFERS, RADII AND ANGULAR DIMENSIONS ISO 2768 - v

Informationen auf dieser Zeichnung sind ohne Angaben zu Verwendung und Freigabe unverbindlich.
INFORMATION ON THIS DRAWING PROVIDED WITHOUT OBLIGATION IF USAGE AND RELEASE ARE NOT SHOWN.

Auswertung der Durchmessermessung erfolgt nach der Gauss-Methode (Arithmetischer Mittelwert)
EVALUATION OF THE DIAMETER MEASUREMENT IS CARRIED OUT ACCORDING TO THE GAUSS METHOD (ARITHMETICAL MEAN VALUE)

Form- und Lagetolerierung
FORM AND POSITION TOLERANCES
EN ISO 1101

Toleranzen
TOLERANCING
ISO 8015

Oberflaechenangaben
SURFACE TEXTURE
EN 4000

Werkstuckkanten
BREAK EDGES
ISO 13715

Werkstoff / MATERIAL: GCG_805000_02_20MnCrS5

Halbzeug / SEMI-FINISHED: -

oelbenetzte Oberflaeche / OIL WETTED SURFACE: 0 mm²

Gesamtoberflaeche / SURFACE AREA: 32153 mm²

Masse / MASS: 0.888 kg

GETRAG
Getriebe- und Zahnradfabrik Hermann Hagenmeyer GmbH & Cie KG

Schutzvermerk nach ISO 16016 beachten
PROTECTION PER ISO 16016

Benennung / ITEM NAME: Schaltrad 4.Gang
SPEED GEAR 4TH

Artikel-Nr./ ITEM NO.: 2501387635
CAD-Modell: 2501387635

Blatt/SHEET 1 von/OF 1 | Reifegrad MATURITY 3 | Format SIZE A1

Ersatz fuer / SUBSTITUTE FOR: -

INTERNAL DATA	CHECKED IN BY	1 (MK.LKD. IN UNS. QS.mm YYYY Nhmm-Ss)	VERSION
Zeichn / DRWN:	Agapi.Raidt	26.03.2015 13:30:16	1
Model:	Agapi.Raidt	26.03.2015 13:30:16	9.