GETRAG

Part Submission Warrant

Part Name: Speed Gear SR1 | Customer Part Number: 250.1.4216.70

Shown on Drawing No.: 250.1.4216.70 | Organization Part #:

Engineering Change Level: b 35670 | Dated: 24-lug-14

Additional Engineering Changes: | Dated:

Safety and/or Government Regulation: [x] Yes [ ] No | Purchase Order No.: | Weight (kg): 1,3960

Checking Aid No.: | Checking Aid Engineering Change Level: | Dated:

ORGANIZATION MANUFACTURING INFORMATION

GETRAG MODUGNO
Organization Name & Supplier/Vendor Code

VIA DEI CICLAMINI N°4
Street Address

MODUGNO | BARI | 70026 | ITALY
City | Region | Postal Code | Country

CUSTOMER SUBMITTAL INFORMATION

RENAULT
Customer Name/Division

Buyer/Buyer Code

TYP 250
Application

MATERIALS REPORTING

Has customer-required Substances of Concern information been reported? [x] Yes [ ] No [ ] n/a

Submitted by IMDS or other customer format:

Are polymeric parts identified with appropriate ISO marking codes? [ ] Yes [ ] No [x] n/a

REASON FOR SUBMISSION (Check at least one)

- [ ] Initial Submission
- [x] Engineering Change(s)
- [ ] Tooling: Transfer, Replacement, Refurbishment, or additional
- [ ] Correction of Discrepancy
- [ ] Tooling Inactive > than 1 year
- [ ] Change to Optional Construction or Material
- [ ] Supplier or Material Source Change
- [ ] Change in Part Processing
- [ ] Parts Produced at Additional Location
- [x] Other - please specify below

REQUESTED SUBMISSION LEVEL (Check one)

- [ ] Level 1 - Warrant only (and for designated appearance items, an Appearance Approval Report) submitted to customer.
- [ ] Level 2 - Warrant with product samples and limited supporting data submitted to customer.
- [x] Level 3 - Warrant with product samples and complete supporting data submitted to customer.
- [ ] Level 4 - Warrant and other requirements as defined by customer.
- [ ] Level 5 - Warrant with product samples and complete supporting data reviewed at organization's manufacturing location.

SUBMISSION RESULTS

The results for [x] dimensional measurements [x] material and functional tests [ ] appearance criteria [x] statistical process package

These results meet all drawing and specification requirements: [x] Yes [ ] NO (If "NO" - Explanation Required)

Mold / Cavity / Production Process

DECLARATION

I hereby affirm that the samples represented by this warrant are representative of our parts which were made by a process that meets all Production Part Approval Process Manual 4th Edition Requirements. I further affirm that these samples were produced at the production rate of ____ / ____ hours. I also certify that documented evidence of such compliance is on file and available for review. I have noted any deviations from this declaration below.

EXPLANATION / COMMENTS: New documentation for first PPAP lost

Is each Customer Tool properly tagged and numbered? [ ] Yes [ ] No [x] n/a

Organization Authorized Signature | Date: 12 Jan 2015

Print Name: Pennacchia Vincenzo | Phone No.: tel 390805858580 | Fax No.:

Title: GPS Leader | E-mail: vincenzo.pennacchia@getrag.com

FOR CUSTOMER USE ONLY (IF APPLICABLE)

Part Warrant Disposition: [x] Approved [ ] Rejected [ ] Other

Customer Signature | Date: 12.01.15

Print Name | Customer Tracking Number (optional)

March 2006 CFG-1001

GETRAG Production Part Approval

DIMENSIONAL TEST RESULTS

Organization:	GETRAG	Part Number:	250.1.4216.70
Supplier/Vendor Code:	GETRAG Modugno	Part Name:	SR1
INSPECTION FACILITY:		Design Record Change Level:	b 35834 24 July 2014
NA		Engineering Change Documents:	

Item	Dimension/Specification	Specification / Limits		Test Date	Qty. Tested	Organization Measurement Results (Data) 1	2	3	4	5	controllo distruttivo	Ok	Not Ok
1	Profile teeth	-	-		5	ok	ok	ok	ok	ok		ok	
2	Root diameter	121,95	121,50		5	121,745	121,788	121,80	121,823	121,778		ok	
3	Outside diameter	133,3	133,0		5	133,087	133,134	133,149	133,166	133,134		ok	
4	MDK	136,885	136,816		5	136,832	136,831	136,862	136,863	136,861		ok	
5	Shot Peened (Almen degree)	0,50	0,60		1						0,51	ok	

SIGNATURE	TITLE	DATE
G. Russo	QPE	12 Jan 2015

Point	Caractheristic	Tolerance	Part 1	Part 2	Part 3	Part 4	Part 5	Controllo piastrina
4	MDK	136,885/136,816	136,862	136,831	136,862	136,863	136,861	
5	Gradi almed	0,6/0,5	valore misurato in data 09 12 2014					0,51

Manual measures by Marposs

SR1 2501 4216 70

12,Jan,2015

Fuer Freigabeinformation freihalten! KEEP FREE FOR RELEASE INFORMATION!

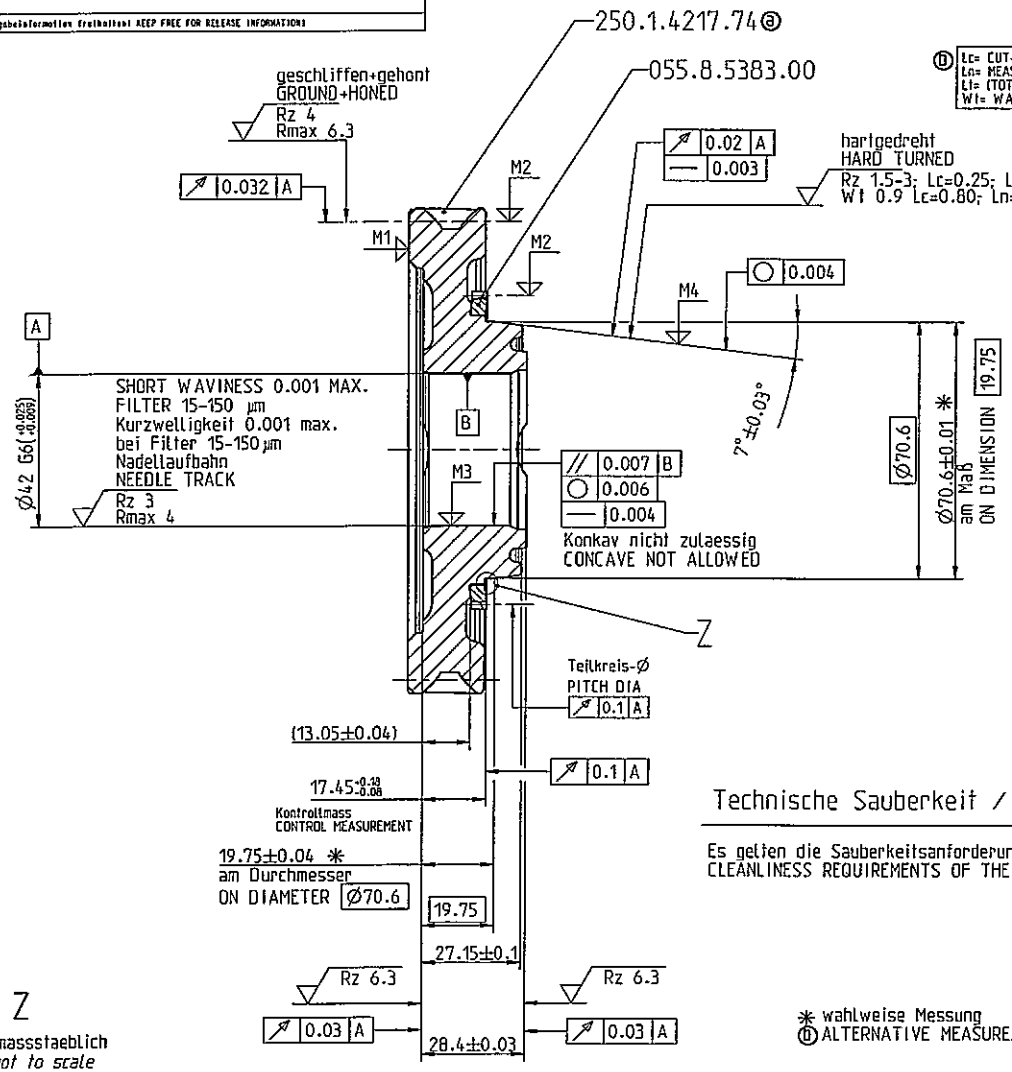

ⓑ Lc= CUT-OFF
Ln= MEASURE LENGTH
Lt= (TOTAL) SENSING LENGTH
Wt= WAVINESS

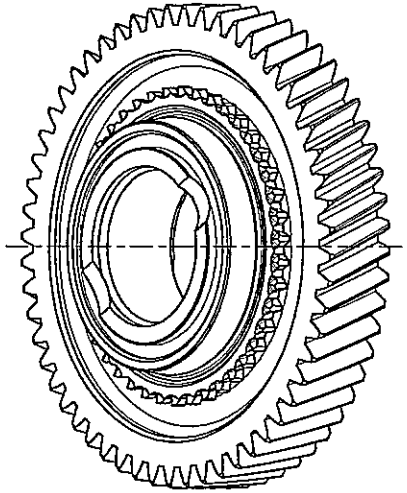

Z
unmassstaeblich
not to scale

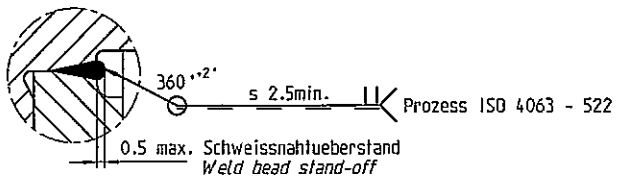

CHECKED ACCORDING ENGINEERING SPECIFICATION
S 3S7R-7M161-AA. DEVIATION FROM THIS SPECIFICATION:
LONGITUDINAL MICRO CRACKS IN THE WELDING MATERIAL ARE
PERMISSIBLE TO A TOTAL OF 2% AROUND THE CIRCUMFERENCE.

✱ wahlweise Messung
ⓑ ALTERNATIVE MEASUREMENT

einsatzgehaertet und angelassen
M1 (Oberflaechenhaerte) : 80.5+2.5 HRA
M2 (Zahnflanke) : CHD (Eht) 550=0.5+0.4
M3 (Bohrung) : CHD (Eht) 550= 0.3min.
M4 (Konus) : CHD (Eht) 550= 0.4+0.4
M5 (Kernhaerte) : min. 300 HV10

CASE HARDENED AND TEMPERED
M1 (CASE HARDNESS) : 80.5+2.5 HRA
M2 (TOOTH FLANK) : CHD (Eht) 550=0.5+0.4
M3 (BORE) : CHD (Eht) 550= 0.3min.
M4 (CONE) : CHD (Eht) 550= 0.4+0.4
M5 (INSIDE BASE OF TOOTH) : min. 300 HV10

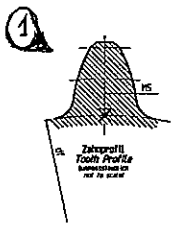

5 kugelgestrahlt nach GN 4110
SHOT PEENED ACCORDING TO GN 4110
in diesem Bereich kugelgestrahlt nach dem Schleuderrad-Verfahren
IN THIS AREA SHOT PEENED ACCORDING TO CENTRIFUGAL WHEEL-PROCESS

Prozessfolge:
Verzahnung fraesen - haerten - strahlen - Verzahnungs-Haribearbeitung
keine Spuren der Haribearbeitung in der Zahnfußausrundung bzw.
im Zahnfuß zulaessig !
PROCESS SEQUENCE:
HOBBING OF TEETH - HARDENING - SHOT-PEENING - TEETH HARD MACHINING
NO MARKS OF HARD MACHINING IN THE ROOT FILLET RESPECTIVELY
ROOT PERMISSIBLE !

Naehere Angaben zur Verzahnung
siehe Verzahnungsblatt
250.1.4217.73
FURTHER GEAR DATA SEE
DATA SHEET NUMBER
250.1.4217.73

Technische Sauberkeit / TECHNICAL CLEANLINESS:

Es gelten die Sauberkeitsanforderungen nach GN 4340-1
CLEANLINESS REQUIREMENTS OF THE GN 4340-1 HAVE TO BE ABIDED

Fuer GETRAG intern:
Dieses Bauteil ist Bestandteil der Gruppen Nummer 250.1.6483.00
Lieferant/Hersteller: Bari
GETRAG INTERNAL ONLY:
THIS COMPONENT IS PART OF GROUP NUMBER 250.1.6483.00
SUPPLIER/MANUFACTURER: Bari

Fuer die Lieferung und Kennzeichnung im Data Matrix Code
(Bauteil und/oder Verpackung)
muss die Gruppen Nummer 250.1.6483.00 verwendet werden.
FOR SHIPPMENT AND IDENTIFICATION WITHIN THE DATA MATRIX CODE
(COMPONENT AND/OR PACKAGING)
THE GROUP NUMBER 250.1.6483.00 HAS TO BE USED.

PPAP nach / ACCORDING TO 250.1.4216.70

GCG 803001	0	<M>					
	0	<C>					
GN 3010	0	<M>					
	0	<C>	b	3x	35670	Oberflaechenbearbeitung/SURFACE FINISH geaendert/CHANGED; Text neu/TEXT NEW; wahlweise Messung/ALTERNATIVE MEASUREMENT war/WAS wahlweise Messung/OPTIONAL MEASUREMENT	20140724
	0	<A>					
CAD Stuf Engineer			a	1x	35834_1	250.1.4217.74 war/WAS 250.1.4217.73	20140613
			---	---	35834	Spezifikationsreifegrad F erfüllt / MATURITY LEVEL OF SPECIFICATION F APPROVED	20140403

Massstab / SCALE M: 1:1 (--)	Buchst. CHANGE INDEX	Anzahl NUMBER	Aend.-Nr. CHANGE ORDER NO.	Aenderung --nur mittels CAD zulaessig- FMEA ueberpruefen-- MODIFICATION --ONLY ALLOWED BY CAD; CHECK FMEA--	Datum DATE

Allgemeintoleranzen fuer Laengenmasse, Form und Lage ISO 2768 - mH gebrochene Kanten, Radien und Winkelmasse ISO 2768 - v
GENERAL TOLERANCES FOR LINEAR DIMENSIONS, FORM AND POSITION ISO 2768 - mH, CHAMFERS, RADII AND ANGULAR DIMENSIONS ISO 2768 - v

Informationen auf dieser Zeichnung sind ohne Angaben zu Verwendung und Freigabe unverbindlich.
INFORMATION ON THIS DRAWING PROVIDED WITHOUT OBLIGATION IF USAGE AND RELEASE ARE NOT SHOWN.

Auswertung der Durchmessermessung erfolgt nach der Gauss-Methode (Arithmetischer Mittelwert)
EVALUATION OF THE DIAMETER MEASUREMENT IS CARRIED OUT ACCORDING TO THE GAUSS METHOD (ARITHMETICAL MEAN VALUE)

Form- und Lagetolerierung FORM AND POSITION TOLERANCES EN ISO 1101	Tolerierung TOLERANCING ISO 8015	Oberflaechenangaben SURFACE TEXTURE GN 4005	Werkstueckkanten BREAK EDGES ISO 13715

Werkstoff / MATERIAL: -
Halbzeug / SEMI-FINISHED: -
oelbenetzte Oberflaeche / OIL WETTED SURFACE: 0 mm²
Gesamtoberflaeche / SURFACE AREA: 0 mm²
Masse / MASS: 1.629 kg

GETRAG
Getriebe- und Zahnradfabrik Hermann Hagenmeyer GmbH & Cie KG

Schutzvermerk nach ISO 16016 beachten
PROTECTION PER ISO 16016

Benennung / ITEM NAME	Artikel-Nr./ ITEM NO.	Blatt/SHEET 1 von/OF 1	Reifegrad MATURITY	Format SIZE
Schaltrad 1. Gang vst. SPEED GEAR 1ST CPL.	2501421670 CAD-Modell: 2501421670		F	A2

Ersatz fuer SUBSTITUTE FOR	INTRALINK DATA	CHECKED IN BY	CHECKED IN DH.mm.yyyy hh:mm:ss	VERSION
-	Zeichng / DRW:	Appl.Rahl	10.06.2014 07:53:51	A
	MODEL:	Appl.Rahl	24.07.2014 11:41:00	A-

STIRNRAD / GEAR	außenverzahnt / external
Zähnezahl / Number of teeth z	56
Modul / Normal module m_n	2.100000
Eingriffswinkel / Normal pressure angle α_n	20° 0' 0"
Schrägungswinkel / Helix angle β	22° 48' 0"
Steigungsrichtung / Hand of helix	LEFT
Profilverschiebungsfaktor / Addendum modification coeff. x	-0.142
Teilkreisdurchmesser / Pitch diameter d	127.568
Kopfkreisdurchmesser / Outside diameter d_a	$133.25_{-0.30}$
Kopfnutzkreisd. theo. max. / Tip diam. usable theo. d_{Na}	132.80
Kopfnutzkreisd. theo. min. / Tip diam. usable theo. d_{Na}	132.35
Fußkreisdurchmesser / Root diameter d_f	$121.95_{-0.45}$
Fußnutzkreisdurchmesser / Root diameter usable d_{Nf}	125.55
Grundkreisradius / Base circle radius r_b	59.327
Grundkreisdurchmesser / Base diameter d_b	118.654
Normalzahndicke / Normal tooth thickness max. s_n	3.003
Normalzahndicke / Normal tooth thickness min. s_n	2.973
Meßzähnezahl / Number of teeth spanned k	8
Zahnweite / Base tangent length max. W_k	48.294
Zahnweite / Base tangent length min. W_k	48.266
Meßkugeldurchmesser / Ball diameter D_M	5.0000
Diam. Zweikugelmaß / Measurement o. balls max. M_{dK}	136.885
Diam. Zweikugelmaß / Measurement o. balls min. M_{dK}	136.816
Verdrehflankenspiel / Circumferential backlash theo.	0.064 0.175

Toleranzen der Verzahnung (DIN 3961 vom Aug. 1978) (7)
gültig für Werte am Einzelzahn
Tolerances of gearing (DIN 3961 of Aug. 1978)
valid for values at individual tooth

	linke Fl. / left flank	rechte Fl. / right flank		
Profil-Formabweichung / Profile form error $f_{f\alpha}$	0.006		Eingriffsteilungs-Abweich. / Normal pitch error f_{pe}	0.011
Profil-Gesamtabweichung / Total profile error F_α			Teilungs-Einzelabweichung / Adjacent pitch error f_p	0.011
Profil-Winkelabweichung / Profile angle error $f_{H\alpha}$	0.000 ± 0.005	0.000 ± 0.005	Teilungssprung / Diff. bet. adjacent pitches f_u	0.014
Flankenl.-Winkelabweich. / Tooth alignment error $f_{H\beta}$	+ 0.018 ± 0.008	-0.020 ± 0.008	Teilungs-Summenabweich. / Cumulative circ. pitch error F_{pk}	
Flankenl.-Gesamtabweich. / Total alignment error F_β	0.011	0.011	Rundlaufabweichung / Radial run-out F_r	0.032
Flankenl.-Formabweich. / Longitudinal alignment err. $f_{f\beta}$	0.007		Zahndickenschwankung / Range of tooth thickn. error R_s	
Teilungs-Gesamtabweich. / Cumulative pitch error F_p	0.045			
Einf.-Wälzabweichung / Tangential composite error F_i'			Zweifl.-Wälzabweichung / Radial composite error F_i''	0.036
Einflanken-Wälzsprung / Tang. tooth to tooth comp. err. f_i'			Zweifl.-Wälzsprung / Radial tooth to tooth comp. err. f_i''	0.016
Radbreite im Meßkreis d_M / Facewidth in meas. diam. b	21.00		Meßkreis Krümmungsradius / Radius of curvature meas. diam. ρ_{dM}	22.60

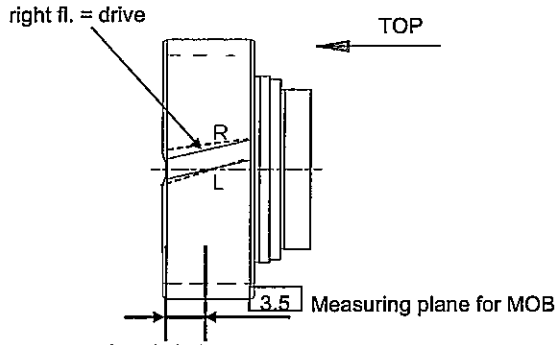

Bezugsprofil-Schleifscheibe
Grinding tool data

Schleifscheibenkopfhöhe / Grinding wheel tip height h_{aP0S} = 2.400

Schleifscheibenkopfradius / Grinding wheel tip radius ρ_{aP0S} = 1.107

Schleifdurchmesser / grinding diameter = $123.87_{-0.30}$ ≡ 17.78

Hondurchmesser / honing diameter = $123.87_{-0.30}$ ≡ 17.78

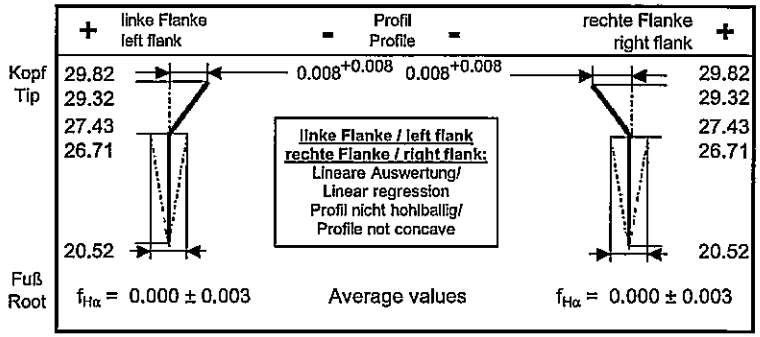

* Schreibbeginn
* Start of checking

Ø = $124.30_{-0.30}$ ≡ 18.52

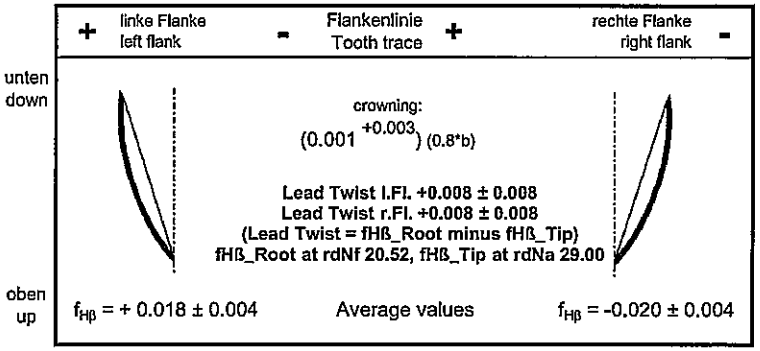

* ffαf (zwischen dNf und dem Schreibbeginn ds) max ffα/2, jedoch 0.003 zulässig
* ffαf (between dNf and start of checking ds) max ffα/2, 0.003 allowable.

Profil- und Flankenlinienprüfung nach VDI/VDE 2612
Tabellenwerte für F_β und $f_{H\beta}$ sind auf die gesamte Radbreite im Meßkreis d_M bezogen
Flankenlinienprüfbereich Lβ = 0.8*b hochgerechnet auf 1.0*b
Begriffe für Stirnräder nach DIN 868, 3960, 3998

Profile and helix checking according to VDI/VDE 2612
Listed tolerance data for F_β and $f_{H\beta}$ refers to the total face width in the meas. dia. d_M
Tooth trace testing area Lβ = 0.8*b calculated to 1.0*b
Terms of the tooth system according to DIN (German Industrial Standards) No. 868, 3960, 3998

Vorbearbeitungsdaten siehe Verzahnungsblatt Vorbearbeitung gleicher Nr.
For pre-machining dimensions, see gear data sheet same number

Wkz-Profil siehe Werkzeugdatenblatt Nr. / For Tooth profile, see tool data sheet number 250.1.4217.74

Buch.	Anz.	Änd.Nr.		Datum	Name

Verteiler:

Schutzvermerk nach DIN 34 beachten

GETRAG
GETRAG Getriebe- und Zahnradfabrik Hermann Hagenmeyer GmbH & Cie KG

Abbildungen sind unmaßstäblich. / Diagrams not to scale.

Ersatz für

Erstverwendung bei Getriebetype: 250.0.0004.16

Remark:

	Datum	Name
gez.	2014-05-08	Cricenti, Fabrizio
gepr.		

Verzahnungsblatt Endkontrolle
Final Check Gear Data

Benennung: / Naming: **Schaltrad 1.Gg.**

Zeichnungsnummer: / Drawing number: **250.1.4217.74**

Fuer Freigabeinformation (Fertigstellung) KEEP FREE FOR RELEASE INFORMATION

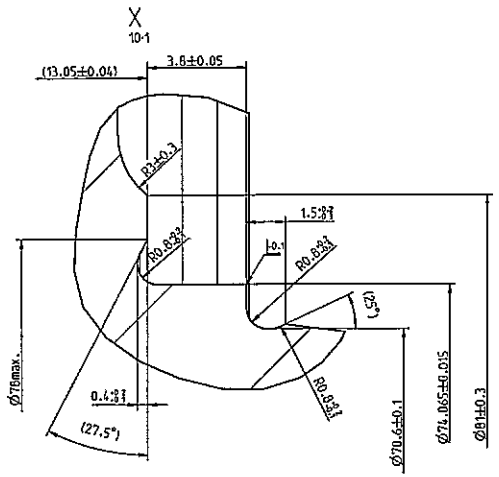

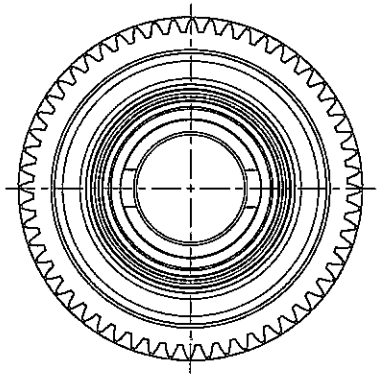

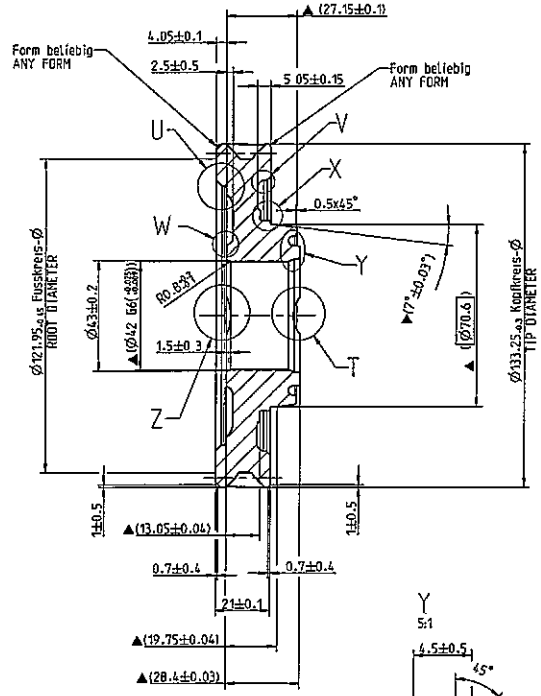

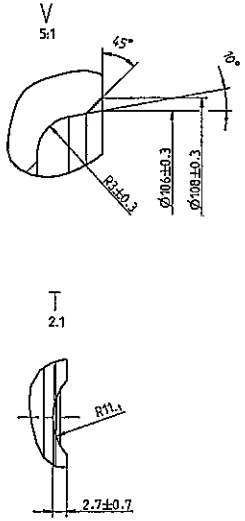

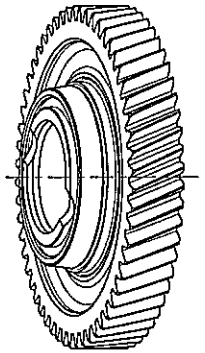

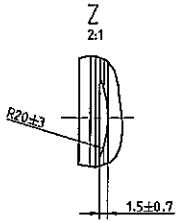

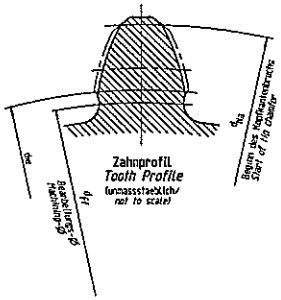

Kanten an Laufverzahnungen \ *Tooth chamfers*
unmassstaeblich \ *not to scale*

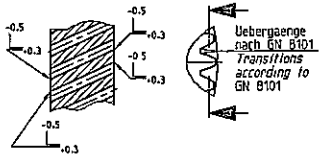

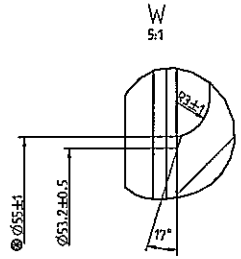

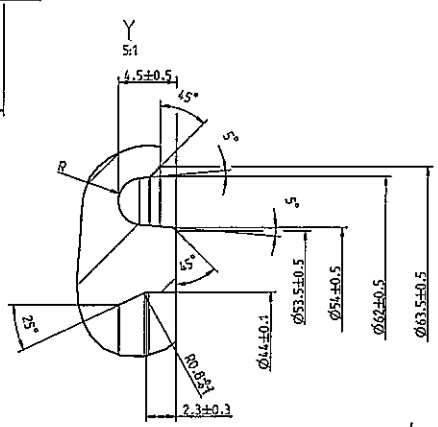

vorbearbeitet, Fertigmass▲ (...)
siehe 250.1.4216.72
PREMACHINED, FINISHED DIMENSION▲ (...)
SEE 250.1.4216.72

Naehere Angaben zur Verzahnung
siehe Verzahnungsblatt gleicher Nummer
FURTHER GEAR DATA SEE
DATA SHEET SAME NUMBER

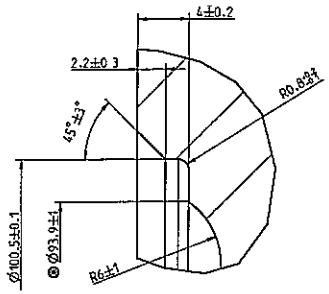

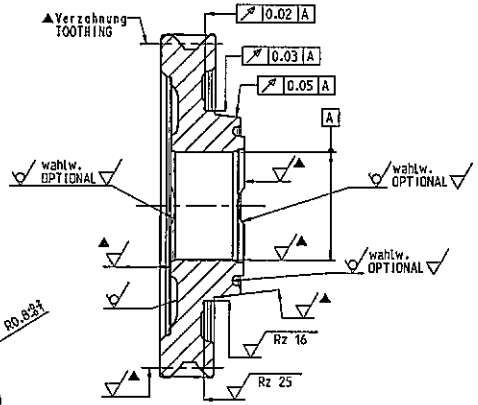

Rz 40

⊛Rohteilgeometrie
RAW PART GEOMETRY

Haerteangaben siehe
Schaltrad 1.Gg. vst. 250.1.4216.72
HEAT TREATMENT SEE
SPEED GEAR 1ST. CPL. 250.1.4216.72

Aussenverzahnung / EXTERNAL GEAR	
Zahnwelle/ SPLINE DATA EXTERNAL	
Bezugsdurchmesser / REFERENCE DIAMETER d_B	
Modul / NORMAL MODULE m_n	2.100
Zaehnezahl / NUMBER OF TEETH z	56
Eingriffswinkel / NORMAL PRESSURE ANGLE α_n	20.0°
Schraegungswinkel / HELIX ANGLE β	22.8°
Richtung / HAND OF HELIX	LEFT, links
Bezugsprofil / BASIC RACK	
Profilverschiebung/AZDENDUM MODIFICATION $x \cdot m_n$	Normwert / nominal -0.299
Qualitaet / GEAR TOOTH QUALITY ISO1328-1	7
Toleranzklasse / TOLERANCE CLASS	
Zahndicke / TOOTH THICKNESS s_n (Sollmass / BASE DIMENSION) effective max.	
Zahndicke / TOOTH THICKNESS s_n (Ist-Ueberpruefung / ACTUAL) max.	3.003
min.	2.973
Messkugel-Ø / BALL DIA D_M	5.00
Pruefmass / MEASUREMENT OVER BALLS M_{DK} (Ist-Ueberpruefung / ACTUAL) max.	136.885
min.	136.816

GCG 803001	0	<M>						
	0	<C>						
GN 3010	0	<N>						
	0	<C>						
	0	<A>						
CAD Ref Editor			---	---	35034	Specif kationsreifegrad F erfaellt / MATURITY LEVEL OF SPECIFICATION F APPROVED		20140402
Massstab / SCALE M. 1:1 (--)			Aenderungsnummer CHANGE NUMBER	Aenderungsindex CHANGE INDEX	Aenderungs-Nr. CHANGE ORDER NO.	Aenderung —nur mittels CAD zulaessig. ENGL aenderungsnummer MODIFICATION —ONLY ALLOWED BY CAD. CHANGE NUMBER		Datum DATE

Allgemeintoleranzen nach Laengenmass, Form und Lage ISO 2768 - mK
Unbemaesste Kanten, Radien und Winkelmasse ISO 2768 - v
GENERAL TOLERANCES FOR LINEAR DIMENSIONS, FORM AND POSITION ISO 2768 - mK
CHAMFERS, RADII AND ANGULAR DIMENSIONS ISO 2768 - v

Informationen auf dieser Zeichnung sind ohne Angabe zu Verwendung und Freigabe unverbindlich.
INFORMATION ON THIS DRAWING PROVIDED WITHOUT OBLIGATION IF USAGE AND RELEASE ARE NOT SHOWN.

Auswertung der Oberflaechenrauheit erfolgt nach der Gaussmethode (arithmetischer Mittelwert)
EVALUATION OF THE ROUGHNESS MEASUREMENT IS CARRIED OUT ACCORDING TO THE GAUSS METHOD (ARITHMETICAL MEAN VALUE)

Form- und Lagetolerierung FORM AND POSITION TOLERANCES	Tolerierung TOLERANCING ISO 8015	Oberflaechenangaben SURFACE TEXTURE DIN 4760	Werkstuetzkanten SHARP EDGES ISO 13715

Werkstoff / MATERIAL GCG_803000_02_20MnCrS5
Haerte / SCHLIFFHARTE —
Oberflaeche OIL WETTED SURFACE 0.0 m2
Gesamtoberflaeche / SURFACE AREA 50519 mm²
Masse / MASS 5.585 kg
Schutzvermerk nach ISO 16016 beachten PROTECTION PER ISO 16016

GETRAG
Getriebe- und Zahnradfabrik Hermann Hagenmeyer GmbH & Cie KG

Benennung / ITEM NAME: Schaltrad 1.Gang
SPEED GEAR 1ST

Artikel-Nr. / ITEM NO.: 2501421774
CAD-Modell: 2501421774

Blatt/SHEET 1 von/OF 1 | Werkstoff MATERIAL | Format SIZE: F A1

Ersatz fuer / SUBSTITUTE FOR: -

INTERNE DATA		
Erstellt / Gepr.	Name	Datum
		22.01.2014 10:31
		22.01.2014 10:31
		22.01.2014 10:41

RETTIFICA DENTI .70 ≡ .72

circuiti di controllo: 1 / 2 / sala di misura

Istruzioni di controllo

GETRAG

PP Produzione GPS

Materiale: 2501421672
Descrizione: Ruota dentata libera 1.M com Stato:Rilasciato Produzione + Calcolo costi
Operazione: 0230 Rettifica denti
Centro di lavoro: SLW14050 RETTIFICA DENTI SG1

Indice del disegno finito: -
Data emissione: 05.11.2014 / Vito Fiore
Data aggiornamento: 09.01.2015 / Rocco Tanzella

n. SIP Diferro	GN 3010	Caratteristica	Misura nomin.	LTI	LTS	Strumento di controllo	Quantità	Frequenza RK1:	Quantità	Frequenza RK2:	Quantità	Frequenza Sala di misura	Cambio ut.	Metodi di gestione / Documentazione
0004		Contr. 1° pz sec. VBZ 436_803240 Gear data 250.1.4217.7X				MVZ-400249 EVOLVENTIMETRO					1	1° pz 2.3.1.1-R 2		Misu: controllo primo pezzo
						MOA-416121 RUGOSIMETRO TIPO PRK					1	1° pz 2.3.1.1-R 2		
						MZA-401071 CALCOLATORE DI MISURA E9066 MARPOSS					1	1° pz 2.3.1.1-R 2		
0010	M	DIAMETRO A SFERE Mdk	136,850 mm	136,816	136,885	MZA-401071 CALCOLATORE DI MISURA E9066 MARPOSS	3	pz ogni 100 per macchina						CR1: calcolatore di misura
0016		DIAGRAMMA DI DENTATURA CON SVERGOLAMENTO DA GEAR TESTING				MVZ-400249 EVOLVENTIMETRO					1	pz ogni 100 per macchina		Misu: diagramma di dentatura
0018		Svergolamento evolventi				MVZ-400249 EVOLVENTIMETRO					1	Ultimo PZ. prima ravvivatu ra		Misu: diagramma di dentatura
0022		SOMMA DI PASSO Fp	mm		0,045	MVZ-400249 EVOLVENTIMETRO					1	pz. p. turno		Misu: diagramma di dentatura
0028	M	OSCILLAZIONE RADIALE Fr	mm		0,032	MVZ-400249 EVOLVENTIMETRO					1	pz. p. turno		Misu: diagramma di dentatura
0034		RUGOSITA' Rz	0,0 µm	0,0	4,0	MOA-416121 RUGOSIMETRO TIPO PRK					1	1° pz 2.3.1.1-R 2		Misu: controllo primo pezzo
0040		RUGOSITA' Rmax	0,0 µm	0,0	6,3	MOA-416121 RUGOSIMETRO TIPO PRK					1	1° pz 2.3.1.1-R 2		Misu: controllo primo pezzo
0046		Controllo chimico bruciature secondo procedura WTL 3.4.10.01					1	pz cambio mola rettifica						CR1: controllo primo pezzo
0052		PRESENZA RETTIFICA INCOMPLETA					3	pz ogni 100 per macchina						CR1: no documentazione

Istruzioni di controllo

GETRAG

PP Produzione GPS

Materiale: 2501421670
Descrizione: Ruota dentata libera 1.M com Stato:Rilasciato Produzione + Calcolo costi
Operazione: 0110 Pallinatura
Centro di lavoro: OKU15476 PALLINATURA M5MT

Indice del disegno finito: -
Data emissione: 06.11.2013 / Vito Fiore
Data aggiornamento: 19.01.2015 / Gaetano Cacciapaglia

n. SIP 10 interno	GN 3910	Caratteristica	Misura nomin.	LTI	LTS	Strumento di controllo	Quantità	Frequenza RK1:	Quantità	Frequenza RK2:	Quantità	Frequenza Sala di misura	Cambio u.t.	Metodi di gestione / Documentazione
0010		aspetto visivo					3	pz per rack						CR1: no documentazione
0020		controllo presenza marcatura					1	100%						CR1: no documentazione
0030	M	Intensità di pallinatura (Almen)	0,550 mm	0,500	0,600	MHM-432101 COMPARAT. DIGITALE 0-25; 1/1000	1	pz a giorno/macchina						CR1: Tabella di registrazione dati

Point	Caractheristic	Tolerance	Part 1	Part 2	Part 3	Part 4	Part 5	Controllo piastrina
4	MDK	136,885/136,816	136,862	136,831	136,862	136,863	136,861	
5	Gradi almed	0,8/0,7	valore misurato in data 20 12 2014					~~0,73~~ 0,57

Manual measures by Marposs

SR1 2501 4216 70

12,Jan,2015

GETRAG — Ruota cilindrica Evolvente/Elica

Nr. prog.: STI0410o05 0 PNC35 B4784	Controllore: TURNO C	Data: 12.01.2015 08:00	
Denominazione: SR1	Numero denti z	56	Largh.fasc.dent. b 21mm
Numero disegno.: 250.1.4217.78-IF	Modulo m	2.1mm	Tratto evolv. La 6.19mm
Commessa/serie nr.: PPAP 1	Angolo pressione	20°	Tratto elica Lß 16.8mm
Masch.Nr.: M001 Spindel: Formnestl	Angolo elica	-22.8°	Inizio elab. M1 20.52mm
Untersuchungszweck: Laufende Messung	ø Base db	118.6544mm	Palpatore ø (#1) 1mm
Werkzeug: Charge:	Ang. Base	-21.355°	Fat.scor.pr. x -.142

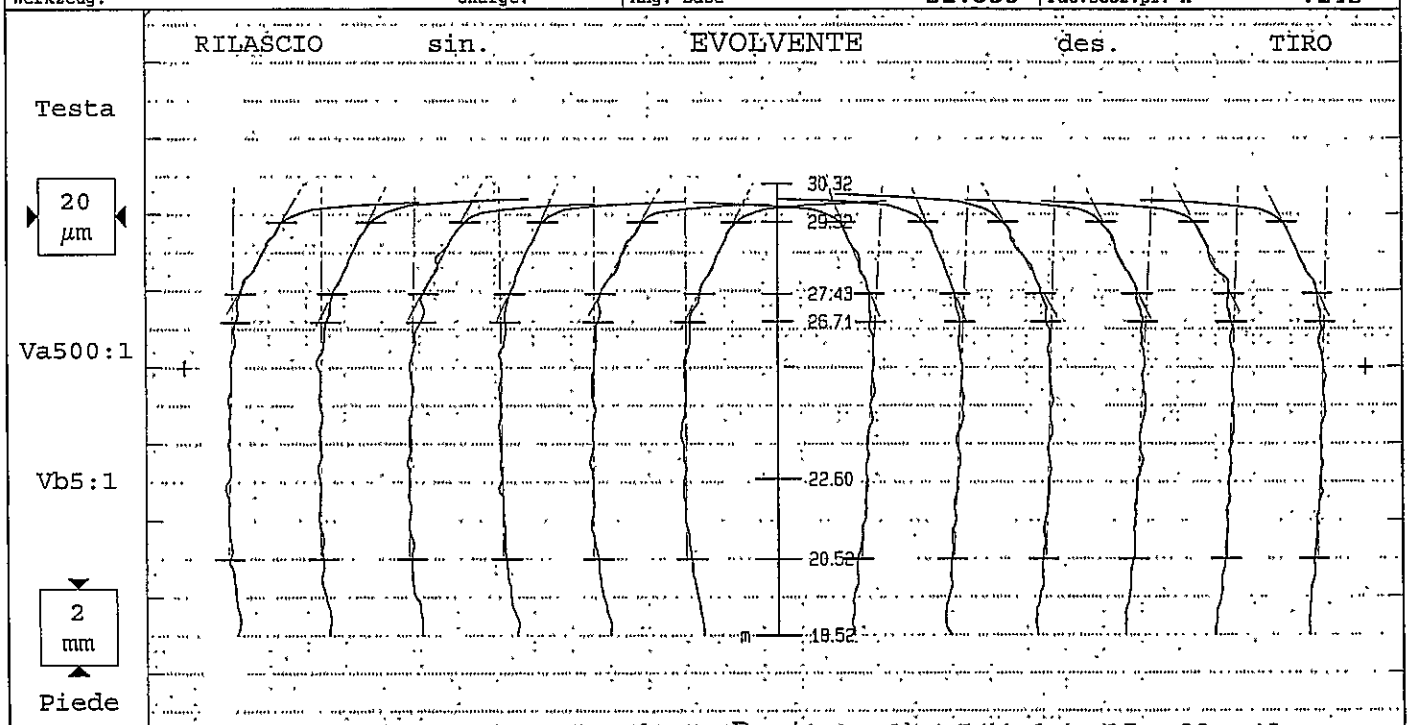

	Tolerance	Medio	Val.misur[µm]						Qual	Tolerance	Val.misur[µm]						Medio	Qual
			Var 1								Var 1							
fHαm	±3	-1								±3							3	
fHα	±5	-1	-1	0	-1	0	0	0		±5	4	3	2	3	2	2	3	
Fα		3	3	3	4	2	2	3			5	3	3	3	3	3	3	
ffα	6	3	2	3	3	2	2	3		6	2	2	3	2	2	3	2	
fKo	-16/-8	-13	-13	-13	-12	-11	-12	-13		-16/-8	-10	-11	-13	-13	-11	-12	-12	

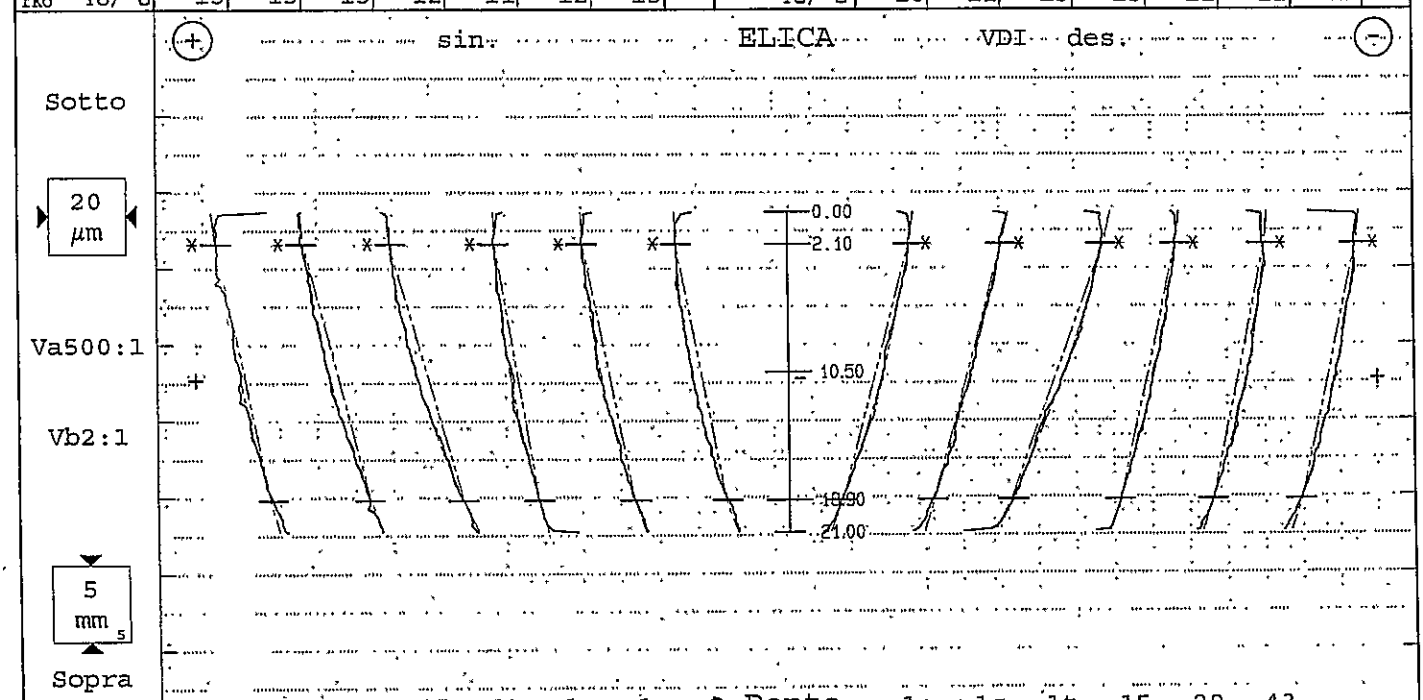

N:Z

			Var 8								Var 6							
fHßm	18±4	20								-20±4							-20	
fHß	18±8	20	18	22	24	14	16	16		-20±8	-23	-23	-31	-19	-17	-19	-20	
Fß	11	4	3	4	6	4	2	3		11	3	3	8	2	4	3	3	
ffß	7	2	3	1	1	2	2	1		7	2	1	2	1	1	1	1	
Cß	1/4	2	1	2	3	2	2	3		1/4	2	1	2	2	2	2	2	
Bd	8±8	2								8±8							8	

Copyright (c) Klingelnberg GmbH
KLINGELNBERG

GETRAG Ruota cilindrica Evolvente/Elica

Nr. prog.:	STI0410o05 0 PNC35 B4784	Controllore:	TURNO C	Data:	12.01.2015 08:55
Denominazione:	SR1	Numero denti z	56	Largh.fasc.dent. b	21mm
Numero disegno.:	250.1.4217.78-IF	Modulo m	2.1mm	Tratto evolv. La	6.19mm
Commessa/serie nr.:	PPAP 1	Angolo pressione	20°	Tratto elica Lß	16.8mm
Masch.Nr.:	M001 Spindel: Formnest	Angolo elica	-22.8°	Inizio elab. M1	20.52mm
Untersuchungszweck:	Laufende Messung	Ø Base db	118.6544mm	Palpatore Ø	(#1)1mm
Werkzeug:	Charge:	Ang. Base	-21.355°	Fat.scor.pr. x	-.142

RILASCIO TIRO

Piede-Ø: 121.745mm [121.5/121.95]

Testa-Ø: 133.087mm [132.95/133.25]

VDI

Copyright (c) Klingelnberg GmbH

KLINGELNBERG

GETRAG — Ruota cilindrica Evolvente/Elica

Nr. prog.: STI0410o05 0 PNC35 B4784	Controllore: TURNO C		Data: 12.01.2015 08:06
Denominazione: SR1	Numero denti z	56	Largh.fasc.dent. b 21mm
Numero disegno.: 250.1.4217.78-IF	Modulo m	2.1mm	Tratto evolv. La 6.19mm
Commessa/serie nr.: PPAP 2	Angolo pressione	20°	Tratto elica Lß 16.8mm
Masch.Nr.: M001 Spindel: Formnestolelica	Angolo elica	-22.8°	Inizio elab. M1 20.52mm
Untersuchungszweck: Laufende Messung	ø Base db	118.6544mm	Palpatore ø (#1) 1mm
Werkzeug: Charge:	Ang. Base	-21.355°	Fat.scor.pr. x -.142

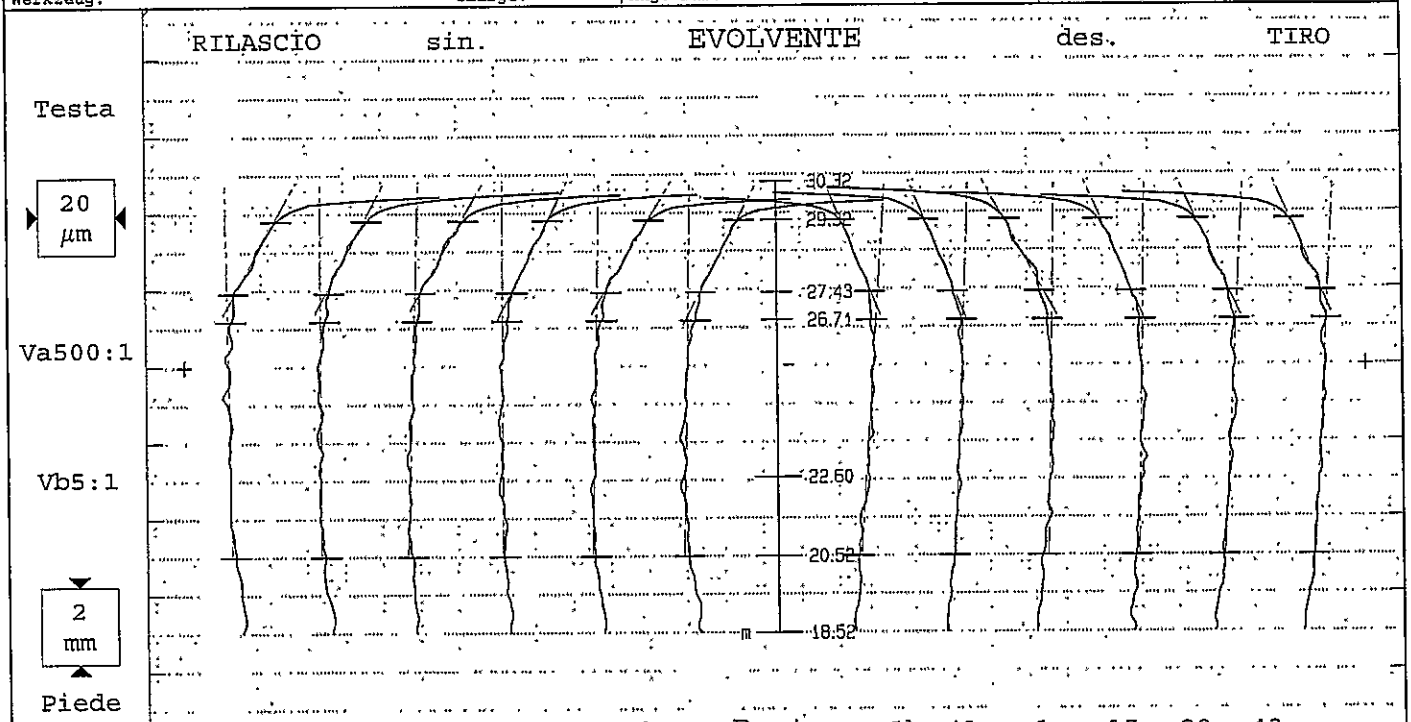

Tolerance	Medio	Val.misur [µm] 43	29	15	1s	1c	1b	Qual	Tolerance	Val.misur [µm] 1b	1c	1s	15	29	43	Medio	Qual
fHαm ±3	-1	Var 3							±3	Var 2						2	
fHα ±5	-1	1	0	-2	0	-1	-1		±5	4	2	1	1	3	3	2	
Fα	3	3	2	3	3	3	4			5	3	3	3	4	4	4	
ffα 6	2	3	2	2	2	2	4		6	3	2	3	3	2	2	2	
fKo -16/-8	-13	-13	-12	-12	-12	-13	-13		-16/-8	-11	-11	-13	-11	-12	-11	-11	

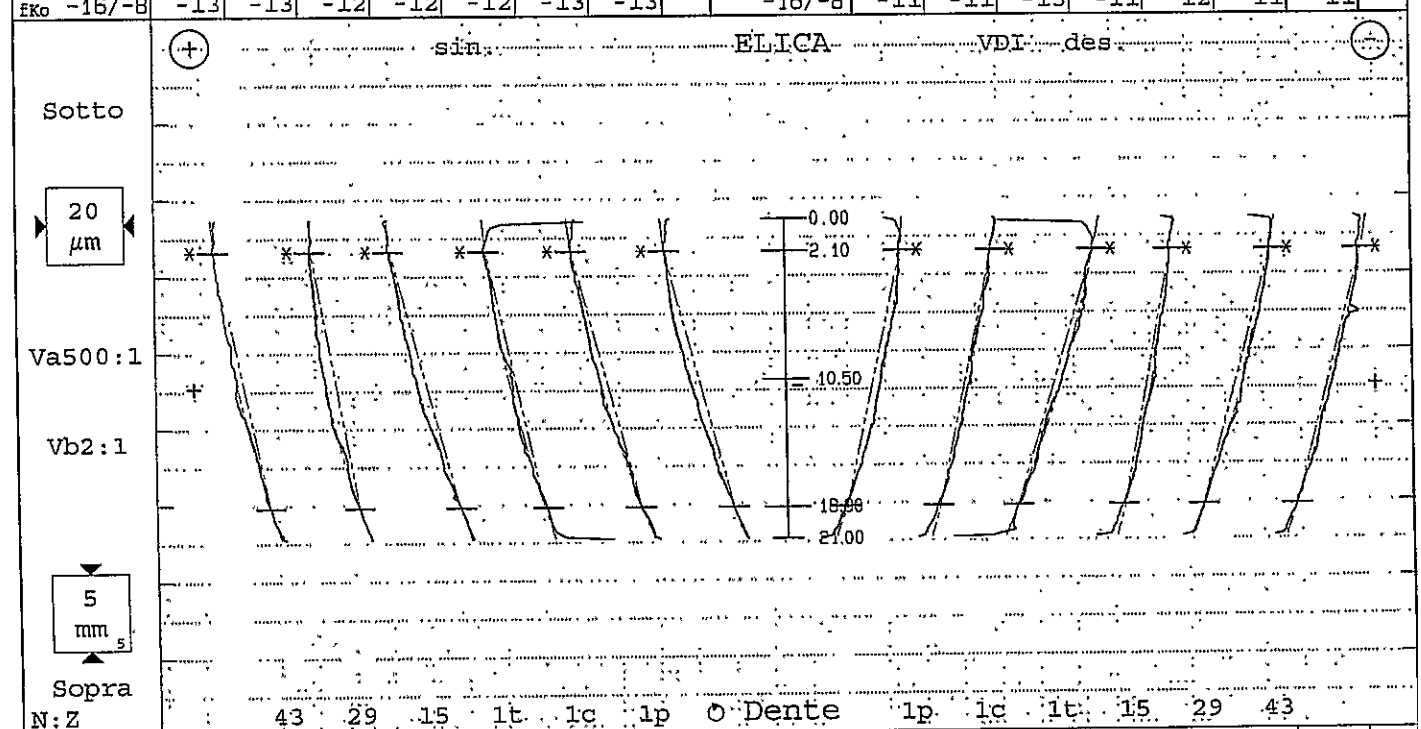

N:Z			43	29	15	1t	1c	1p	Dente	1p	1c	1t	15	29	43		
fHßm	18±4	20	Var 8							-20±4	Var 7					-20	
fHß	18±8	20	18	15	23	18	22	22		-20±8	-18	-18	-26	-16	-23	-22	-20
Fß	11	4	2	3	5	2	4	4		11	3	3	5	4	3	5	4
ffß	7	2	2	2	2	2	2	1		7	1	1	2	2	2	4	2
Cß	1/4	2	2	3	2	2	2	3		1/4	2	1	2	1	2	1	1
Bd	8±8	4								8±8							8

Copyright (c) Klingelnberg GmbH
KLINGELNBERG

GETRAG Ruota cilindrica Evolvente/Elica

Nr. prog.:	STI0410o05 0 PNC35 B4784	Controllore:	TURNO C	Data:	12.01.2015 08:53
Denominazione:	SR1	Numero denti z	56	Largh.fasc.dent. b	21mm
Numero disegno.:	250.1.4217.78-IF	Modulo m	2.1mm	Tratto evolv. La	6.19mm
Commessa/serie nr.:	PPAP 2	Angolo pressione	20°	Tratto elica Lß	16.8mm
Masch.Nr.:	M001 Spindel: Formmaschine	Angolo elica	-22.8°	Inizio elab. M1	20.52mm
Untersuchungszweck:	Laufende Messung	Ø Base db	118.6544mm	Palpatore Ø	(#1)1mm
Werkzeug:	Charge:	Ang. Base	-21.355°	Fat.scor.pr. x	-.142

RILASCIO TIRO

Piede-Ø: 121.788mm [121.5/121.95]

Testa-Ø: 133.134mm [132.95/133.25]

VDI

Copyright (c) Klingelnberg GmbH

KLINGELNBERG

GETRAG — Ruota cilindrica Evolvente/Elica

Nr. prog.: STI0410o05 0 PNC35 B4784	Controllore: TURNO C		Data: 12.01.2015 08:12
Denominazione: SR1	Numero denti z	56	Largh.fasc.dent. b 21mm
Numero disegno.: 250.1.4217.78-IF	Modulo m	2.1mm	Tratto evolv. La 6.19mm
Commessa/serie nr.: PPAP 3	Angolo pressione	20°	Tratto elica Lß 16.8mm
Masch.Nr.: M001 Spindel: Formnext	Angolo elica	-22.8°	Inizio elab. M1 20.52mm
Untersuchungszweck: Laufende Messung	ø Base db	118.6544mm	Palpatore ø (#1) 1mm
Werkzeug: Charge:	Ang. Base	-21.355°	Fat.scor.pr. x -.142

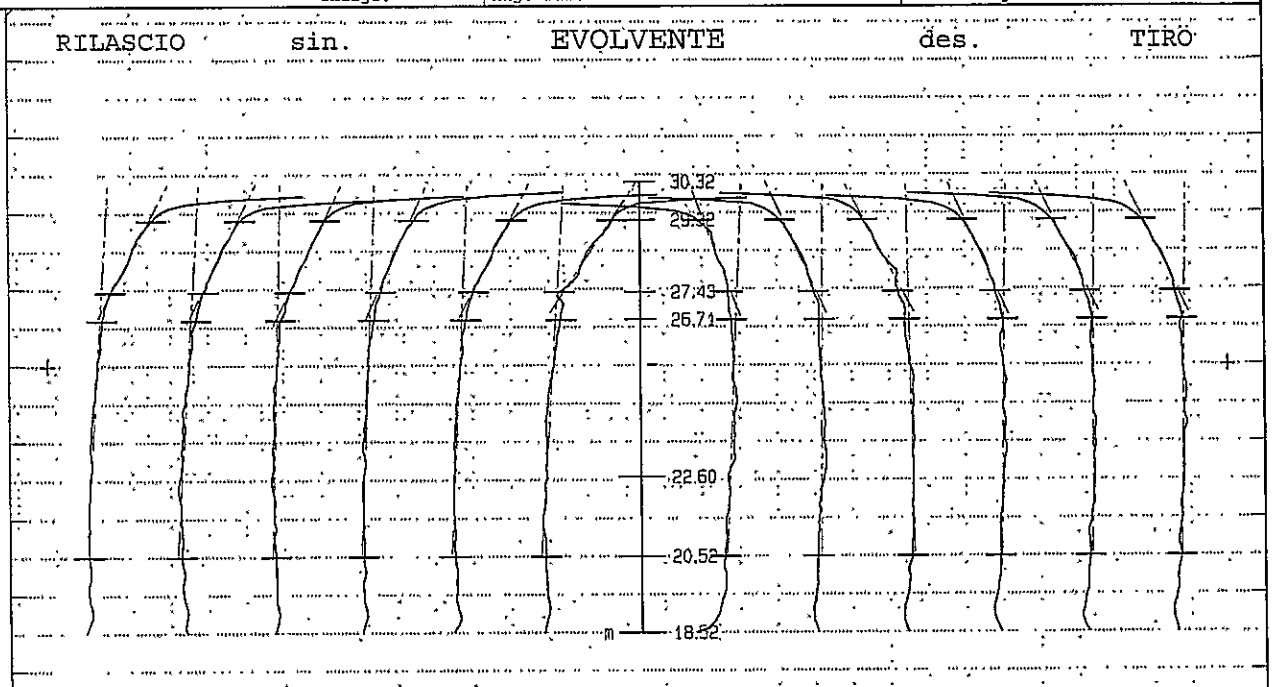

43 29 15 1s 1c 1b Dente 1b 1c 1s 15 29 43

Tolerance	Medio	Val.misur[µm]						Qual	Tolerance	Val.misur[µm]						Medio	Qual
		Var 2								Var 0							
fHαm ±3	-3								±3							1	
fHα ±5	-3	-4	-4	-2	-2	-3	-4		±5	3	1	-1	1	1	1	1	
Fα	4	4	5	3	4	4	5			4	2	3	2	2	2	2	
ffα 6	2	2	2	2	2	2	2		6	2	2	2	2	2	2	2	
fKo -16/-8	-11	-11	-11	-12	-10	-11	-13		-16/-8	-10	-10	-11	-11	-11	-11	-11	

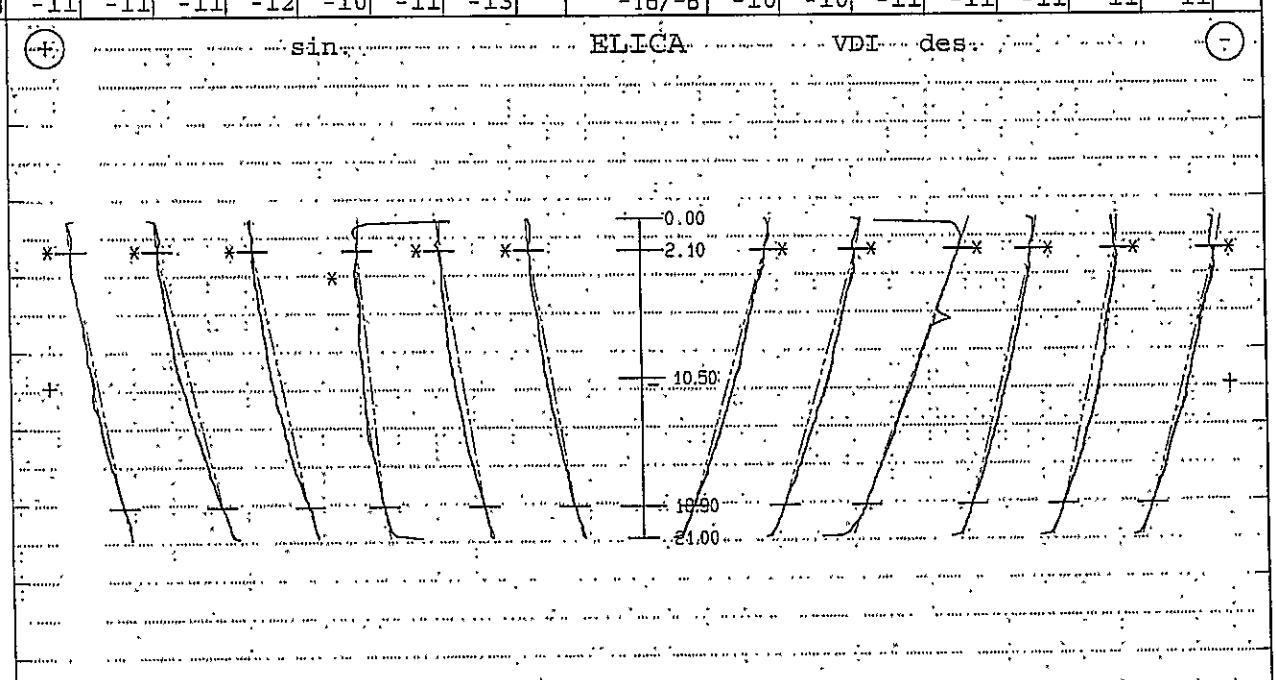

N:Z 43 29 15 1t 1c 1p 0 Dente 1p 1c 1t 15 29 43

fHßm 18±4	17	Var 7							-20±4	Var 7						-22	
fHß 18±8	17	16	21	18	8	14	14		-20±8	-24	-25	-32	-21	-18	-22	-22	
Fß 11	3	2	3	2	8	4	3		11	4	4	10	1	3	3	3	
ffß 7	1	1	1	1	1	1	1		7	2	1	5	1	1	2	1	
Cß 1/4	2	1	2	2	2	2	1		1/4	2	2	1	1	3	1	2	
Bd 8±8	6								8±8							8	

Copyright (c) Klingelnberg GmbH
KLINGELNBERG

GETRAG Ruota cilindrica Evolvente/Elica

Nr. prog.:	STI0410o05 0 PNC35 B4784	Controllore:	TURNO C	Data:	12.01.2015 08:51
Denominazione:	SR1	Numero denti z	56	Largh.fasc.dent. b	21mm
Numero disegno.:	250.1.4217.78-IF	Modulo m	2.1mm	Tratto evolv. La	6.19mm
Commessa/serie nr.:	PPAP 3	Angolo pressione	20°	Tratto elica Lß	16.8mm
Masch.Nr.:	M001 Spindel: Formnest	Angolo elica	-22.8°	Inizio elab. M1	20.52mm
Untersuchungszweck:	Laufende Messung	ø Base db	118.6544mm	Palpatore ø	(#1)1mm
Werkzeug:	Charge:	Ang. Base	-21.355°	Fat.scor.pr. x	-.142

RILASCIO TIRO

Piede-Ø: 121.801mm [121.5/121.95]

Testa-Ø: 133.149mm [132.95/133.25]

VDI

Copyright (c) Klingelnberg GmbH

KLINGELNBERG

GETRAG — Ruota cilindrica Evolvente/Elica

Nr. prog.: STI0410o05 0 PNC35 B4784	Controllore: TURNO C	Data: 12.01.2015 08:36	
Denominazione: SR1	Numero denti z 56	Largh.fasc.dent. b 21mm	
Numero disegno.: 250.1.4217.78-IF	Modulo m 2.1mm	Tratto evolv. La 6.19mm	
Commessa/serie nr.: PPAP 4	Angolo pressione 20°	Tratto elica Lß 16.8mm	
Masch.Nr.: M001 Spindel: Formnestl	Angolo elica -22.8°	Inizio elab. M1 20.52mm	
Untersuchungszweck: Laufende Messung	ø Base db 118.6544mm	Palpatore ø (#1) 1mm	
Werkzeug: Charge:	Ang. Base -21.355°	Fat.scor.pr. x -.142	

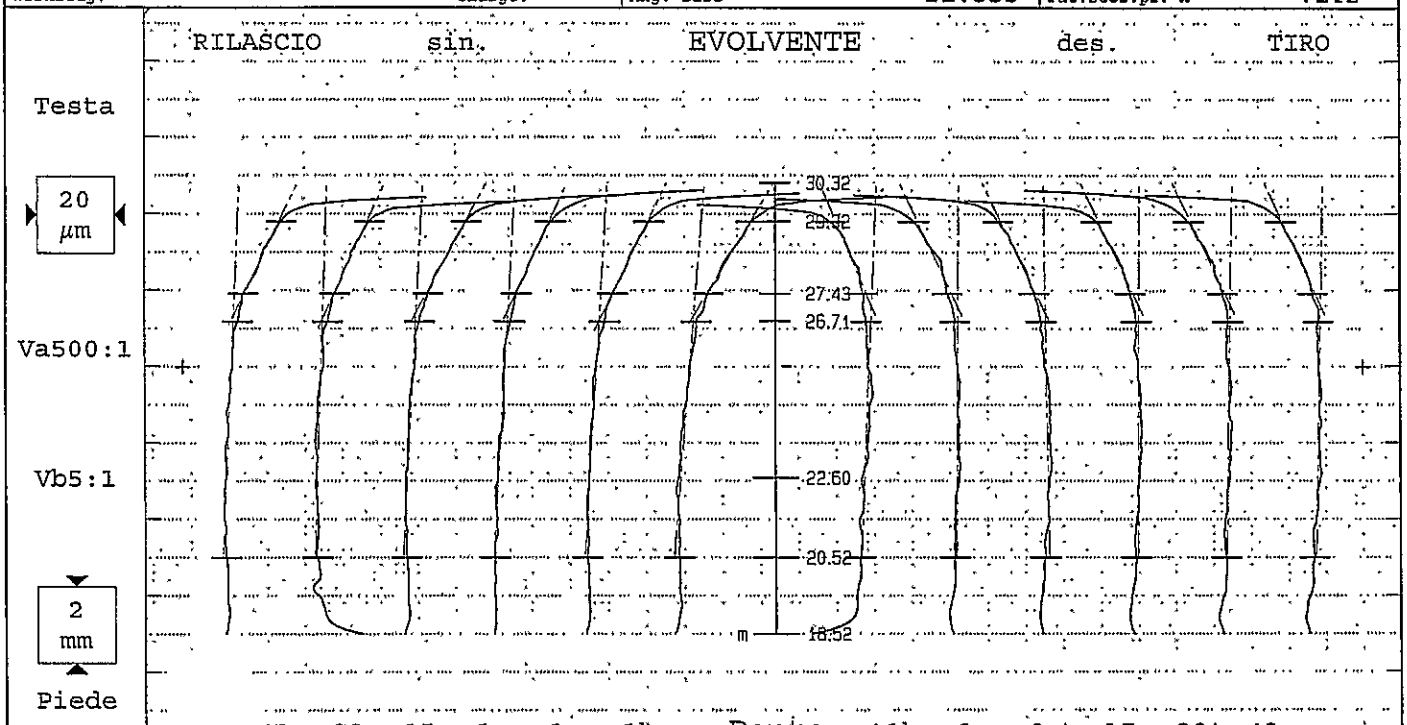

43 29 15 1s 1c 1b Dente 1b 1c 1s 15 29 43

Tolerance	Medio	Val.misur[µm]						Qual	Tolerance	Val.misur[µm]						Medio	Qual
fHαm ±3	-3	Var 2							±3	Var 1						1	
fHα ±5	-3	-3	-2	-3	-4	-4	-5		±5	3	0	-1	0	1	1	1	
Fα	4	4	3	4	4	5	6			4	2	3	2	2	2	2	
ffα 6	2	2	2	2	1	2	2		6	3	2	2	2	2	2	2	
fKo -16/-8	-11	-11	-11	-12	-10	-11	-13		-16/-8	-10	-11	-11	-11	-11	-11	-11	

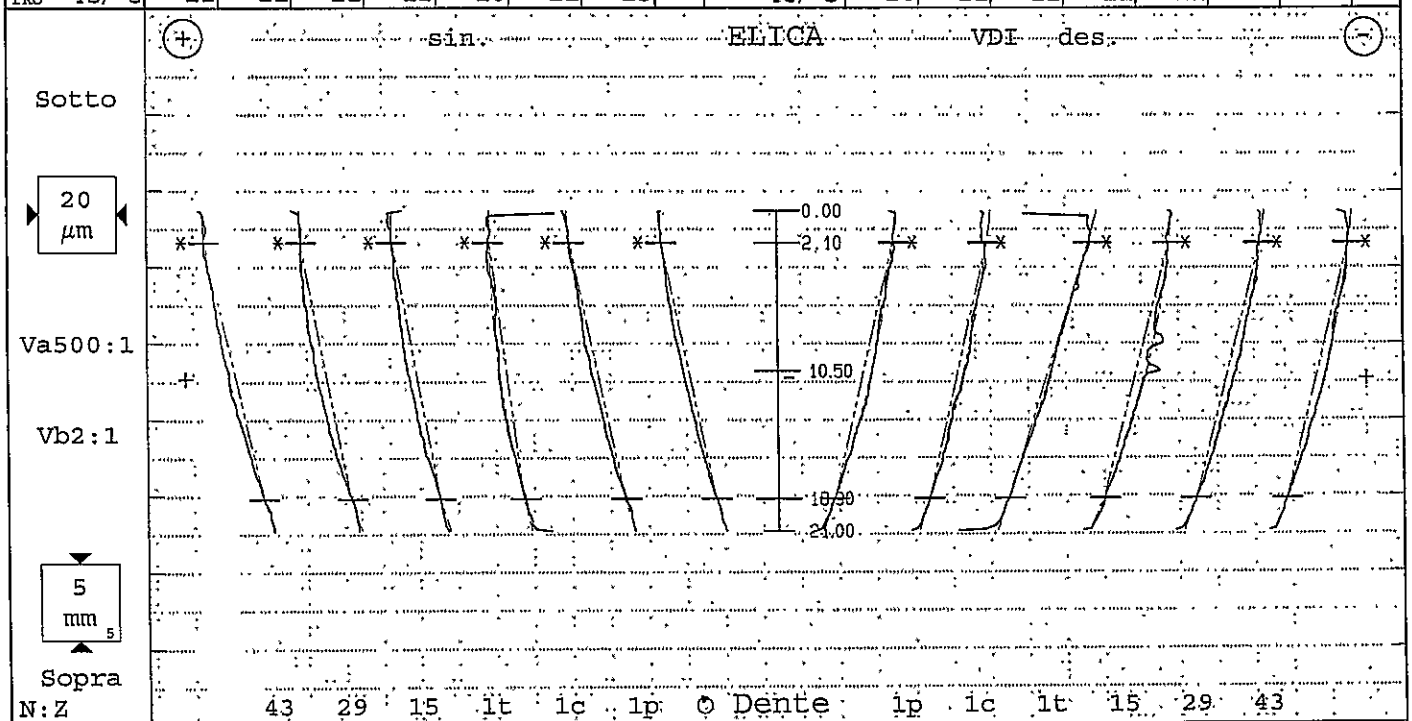

N:Z 43 29 15 1t 1c 1p ⊙ Dente 1p 1c 1t 15 29 43

fHßm 18±4	17	Var 4							-20±4	Var 3						-21
fHß 18±8	17	19	16	15	11	18	18		-20±8	-19	-19	-27	-22	-22	-21	-21
Fß 11	2	2	3	3	5	1	1		11	2	2	6	6	3	2	3
ffß 7	1	1	1	1	2	1	1		7	1	2	2	5	1	1	2
Cß 1/4	2	2	3	2	2	1	2		1/4	2	2	1	3	2	2	2
Bd 8±8	7								8±8							8

Copyright (c) Klingelnberg GmbH
KLINGELNBERG

GETRAG — Ruota cilindrica Evolvente/Elica

Nr. prog.:	STI0410o05 0 PNC35 B4784	Controllore:	TURNO C	Data:	12.01.2015 08:49
Denominazione:	SR1	Numero denti z	56	Largh.fasc.dent. b	21mm
Numero disegno.:	250.1.4217.78-IF	Modulo m	2.1mm	Tratto evolv. La	6.19mm
Commessa/serie nr.:	PPAP 4	Angolo pressione	20°	Tratto elica Lß	16.8mm
Masch.Nr.:	M001 Spindel: Formmaschine	Angolo elica	-22.8°	Inizio elab. M1	20.52mm
Untersuchungszweck:	Laufende Messung	ø Base db	118.6544mm	Palpatore ø	(#1) 1mm
Werkzeug:	Charge:	Ang. Base	-21.355°	Fat.scor.pr. x	-.142

RILASCIO TIRO

Piede-Ø: 121.823mm [121.5/121.95]

Testa-Ø: 133.166mm [132.95/133.25]

VDI

Copyright (c) Klingelnberg GmbH

KLINGELNBERG

GETRAG — Ruota cilindrica Evolvente/Elica

Nr. prog.: STI0410o05 0 PNC35 B4784	Controllore: TURNO C		Data: 12.01.2015 08:42
Denominazione: SR1	Numero denti z	56	Largh.fasc.dent. b 21mm
Numero disegno.: 250.1.4217.78-IF	Modulo m	2.1mm	Tratto evolv. La 6.19mm
Commessa/serie nr.: PPAP 5	Angolo pressione	20°	Tratto elica Lß 16.8mm
Masch.Nr.: M001 Spindel: Formnestiolelica		-22.8°	Inizio elab. M1 20.52mm
Untersuchungszweck: Laufende Messung	Ø Base db	118.6544mm	Palpatore Ø (#1)1mm
Werkzeug: Charge:	Ang. Base	-21.355°	Fat.scor.pr. x -.142

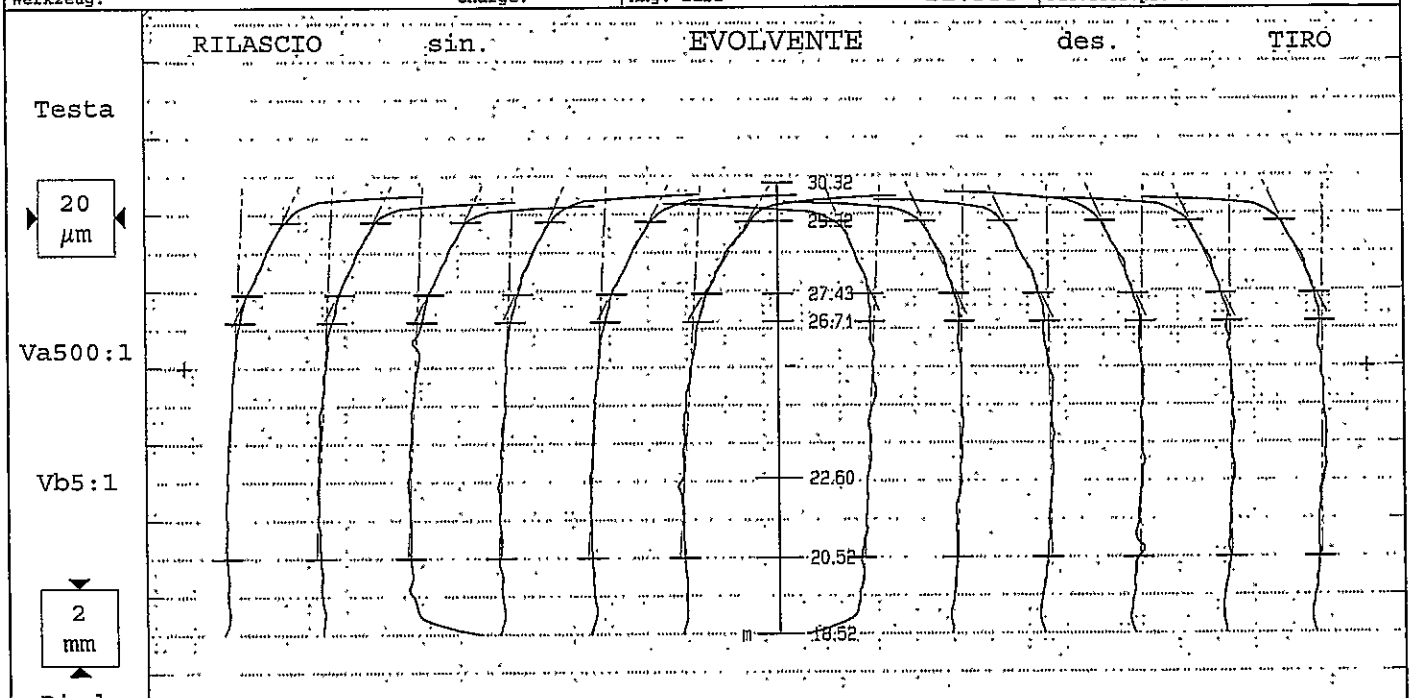

43 29 15 1s 1c 1b Dente 1b 1c 1s 15 29 43

Tolerance	Medio	Val.misur[µm]						Qual	Tolerance	Val.misur[µm]						Medio	Qual
fHαm ±3	-3	Var 0							±3	Var 1						1	
fHα ±5	-3	-3	-3	-3	-3	-3	-4		±5	3	1	-1	1	0	0	1	
Fα	4	4	4	4	4	4	6			4	2	3	3	2	2	2	
ffα 6	2	2	2	2	2	2	3		6	2	2	3	2	2	2	2	
fKo -16/-8	-11	-11	-11	-11	-10	-12	-13		-16/-8	-10	-10	-11	-11	-11	-11	-11	

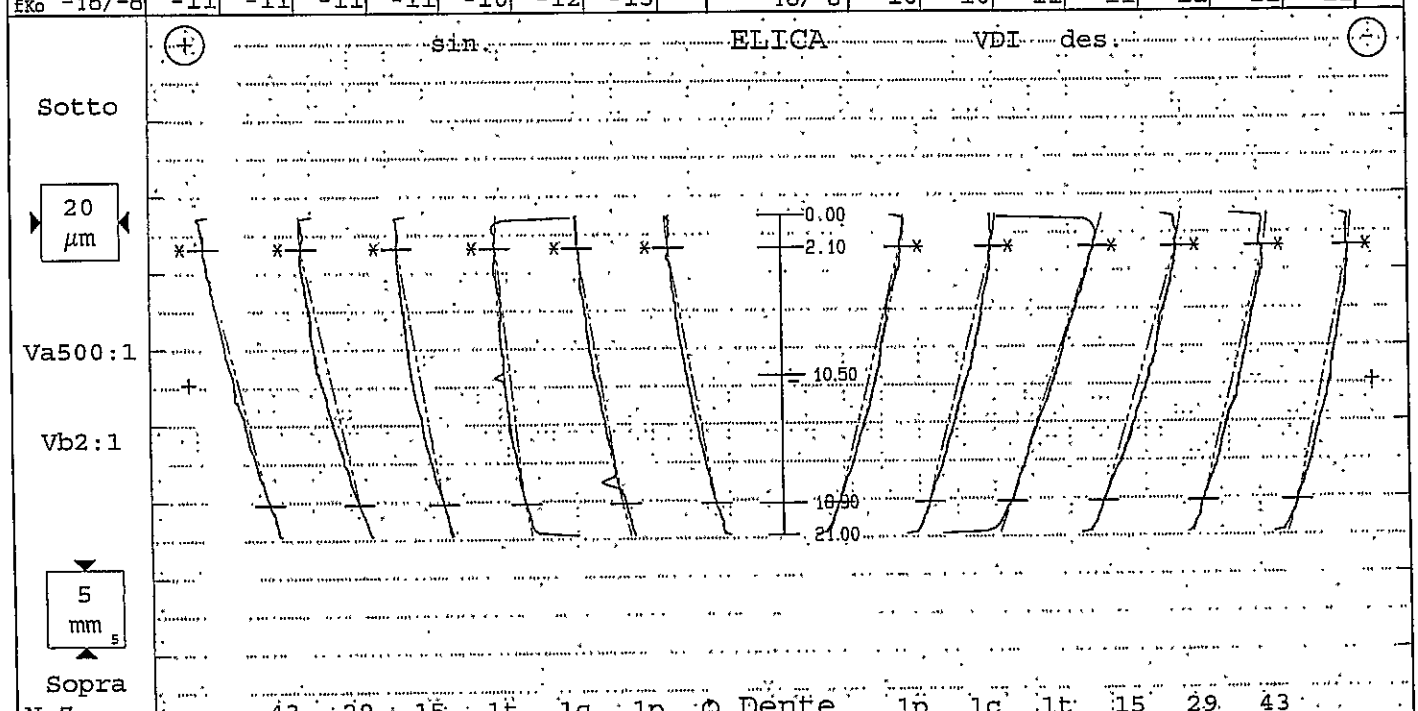

N:Z 43 29 15 1t 1c 1p Dente 1p 1c 1t 15 29 43

fHßm 18±4	17	Var 7							-20±4	Var 7						-21	
fHß 18±8	17	21	19	15	9	14	15		-20±8	-20	-21	-28	-24	-20	-17	-21	
Fß 11	5	4	3	3	7	8	3		11	2	2	6	4	2	3	3	
ffß 7	2	1	1	1	3	5	1		7	2	1	1	2	2	1	2	
Cß 1/4	2	1	3	2	2	1	1		1/4	2	2	1	2	2	2	2	
Bd 8±8	6								8±8							8	

Copyright (c) Klingelnberg GmbH
KLINGELNBERG

GETRAG — Ruota cilindrica Evolvente/Elica

Nr. prog.:	STI0410o05 0 PNC35 B4784	Controllore:	TURNO C	Data:	12.01.2015 08:47
Denominazione:	SR1	Numero denti z	56	Largh.fasc.dent. b	21mm
Numero disegno.:	250.1.4217.78-IF	Modulo m	2.1mm	Tratto evolv. La	6.19mm
Commessa/serie nr.:	PPAP 5	Angolo pressione	20°	Tratto elica LS	16.8mm
Masch.Nr.:	M001 Spindel: Formmaschine	Angolo elica	-22.8°	Inizio elab. M1	20.52mm
Untersuchungszweck:	Laufende Messung	Ø Base db	118.6544mm	Palpatore Ø	(#1)1mm
Werkzeug:	Charge:	Ang. Base	-21.355°	Fat.scor.pr. x	-.142

RILASCIO — TIRO

Piede-Ø: 121.778mm [121.5/121.95]

Testa-Ø: 133.134mm [132.95/133.25]

VDI

Copyright (c) Klingelnberg GmbH

KLINGELNBERG