310567

GETRAG

Precision. Passion. Partnership.

<C> Characteristic on DCT250 Housings

Process Control and Traceability @ Bari

Control strategy @ Bari

- Diameter, Concentricity and Roughness Diam 55 H 8

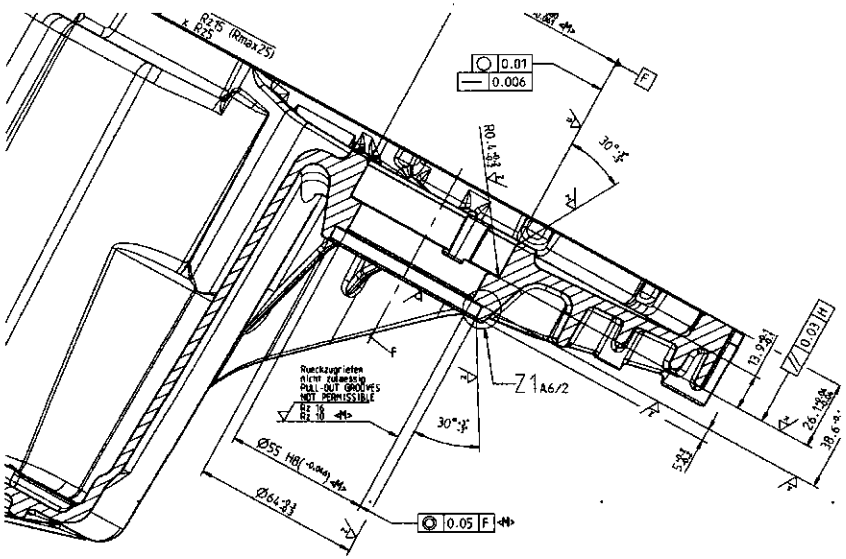

In Production:

Demonstration of process capability ✓

At the asssembly line:

Definition of press force window ✓

Monitoring 100% press in force ✓

Remark: Current drawings show <M>, change in CCB

Control strategy @ Bari

- Diameter and Position, Diam 18 H 7

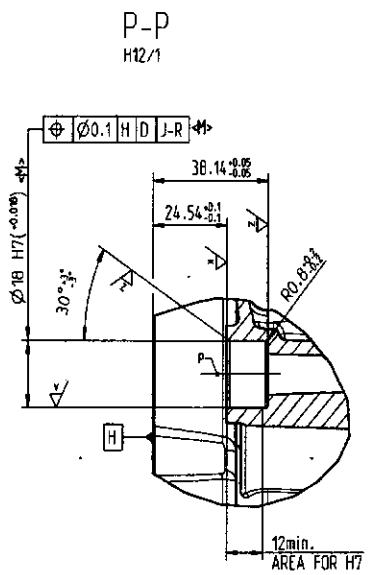

In Production:

Demonstration of process capability ✓

At the asssembly line:

Definition of press force window ✓

Monitoring 100% press in force ✓

Remark: Current drawings show <M>, change in CCB

Control strategy @ Bari

- Diameter and Position, Diam 12 E7

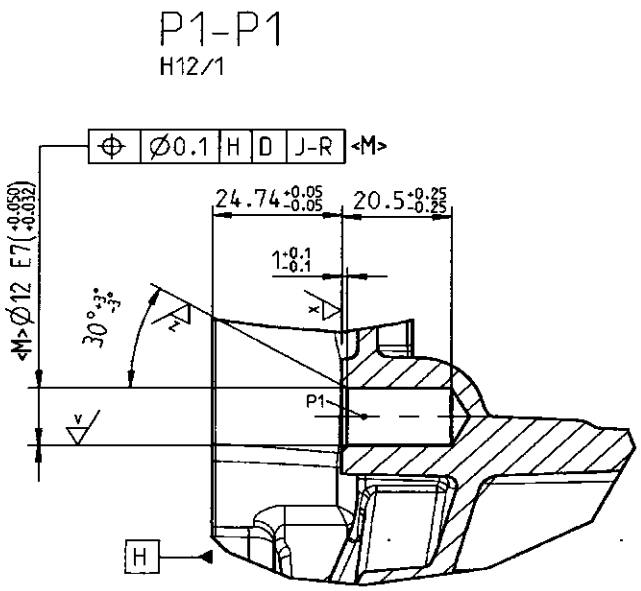

In Production:

Demonstration of process capability ✓

Manual check with go/n-go gauge ✓

At the asssembly line:

Position ensured by the assy process (assembly possible if position of the two housings is correct) ✓

Remark: Current drawings show <M>, change in CCB

Preliminary Process Capability Data (Housing machining)

<C> Characteristic	Housing	Cp	Cpk
Diam. 55 H8	Transmission	5,21	4,97
	Clutch	4,59	3,85
Concentricity	Transmission	na	5,33
	Clutch	na	2,98
Roughness (Ra)	Transmission	1,91	1,57
	Clutch	2,60	2,35
Diam. 18 H7	Transmission	1,53	1,49
	Clutch	3,14	1,39
Position	Transmission		1,36
	Clutch		2,67
Diam 12 E7	Transmission	2,07	1,52
	Clutch	3,37	2,81
Position	Transmission		1,74
	Clutch		1,39

Traceability

- Traceability of housings to assembled transmission will be ensured by the production batch number, as allowed by GCG_803301 (new draft version);
  therefore, there is no Datamatrix code.

- Remarks:

  - SPC in housing machining will be maintened and process capability will be always demonstrate
  - Park lock system is checked 100% at EOL
  - The complete control definition was agreed with Central Quality in U-bach
  - In case of housings to be used as spare parts, 100% measurement of <C> characteristics will be applied – a system to identify the parts has to be defined.

GETRAG

Precision. Passion. Partnership.

Thank you for your attention!