Design-Release:	2012-05-04	Michael.Bassler
Function-Release:	2012-04-20	Bianka.Klein
Geardata-Release:	----------	not required
SAP-Release:	2012-06-11	Ruth.Ernstberger
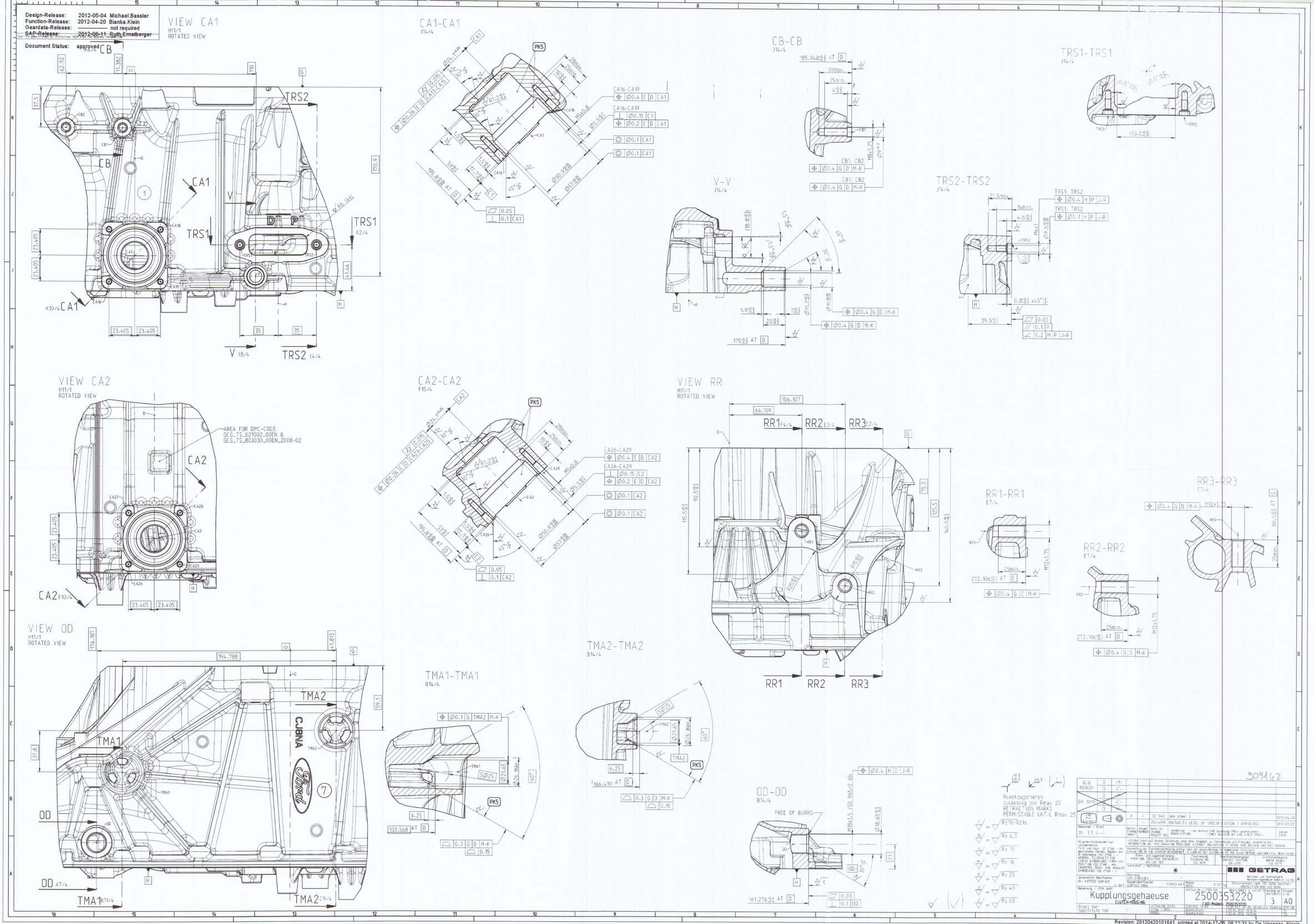
Document Status: approved