Design-Release:	2014-11-03	Leonardo.Santoro
Function-Release:	2014-11-03	Giuseppe.Oscuro
Geardata-Release:	————	not required
SAP-Release:	2014-11-11	Hartmut.Kobald

Document Status: approved

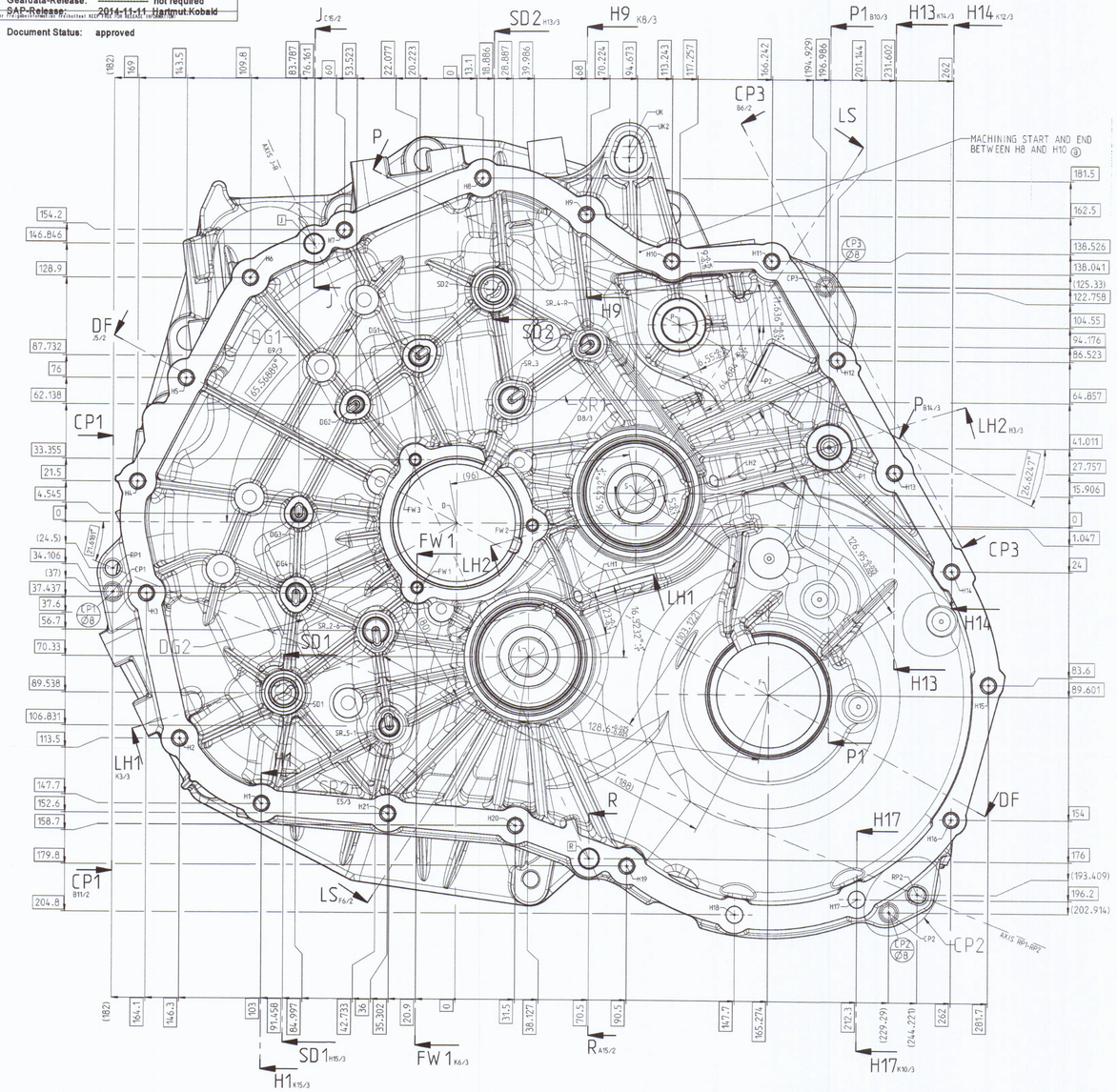

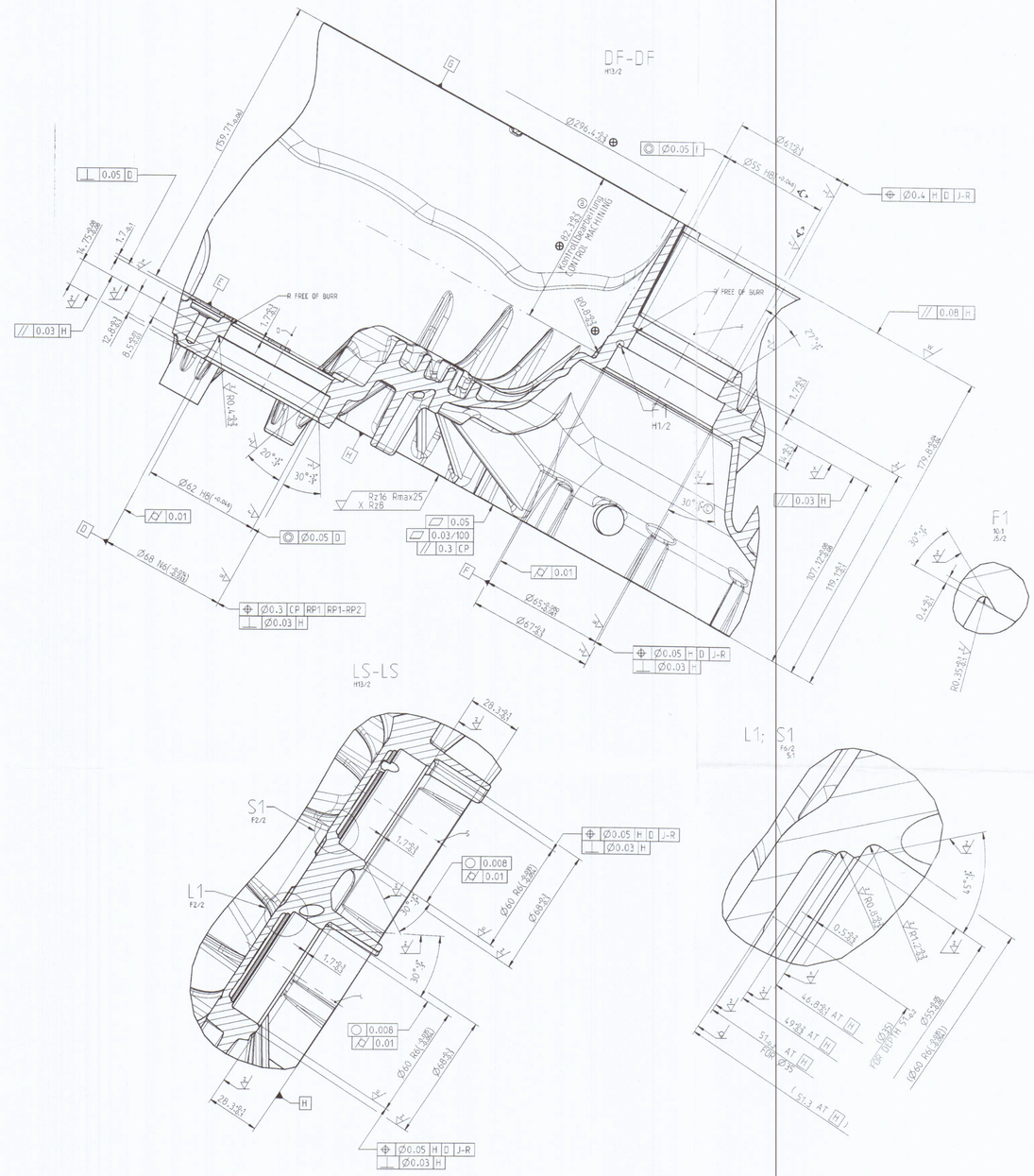

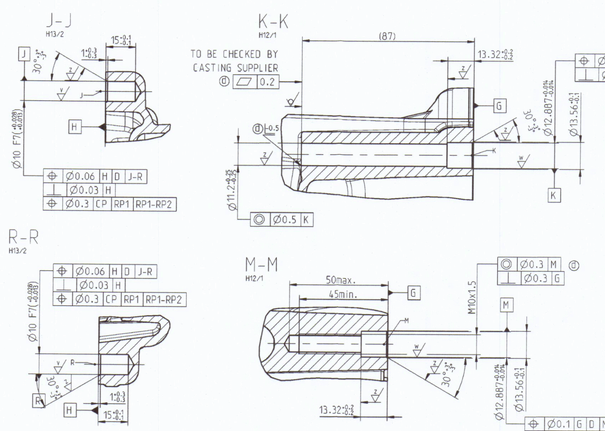

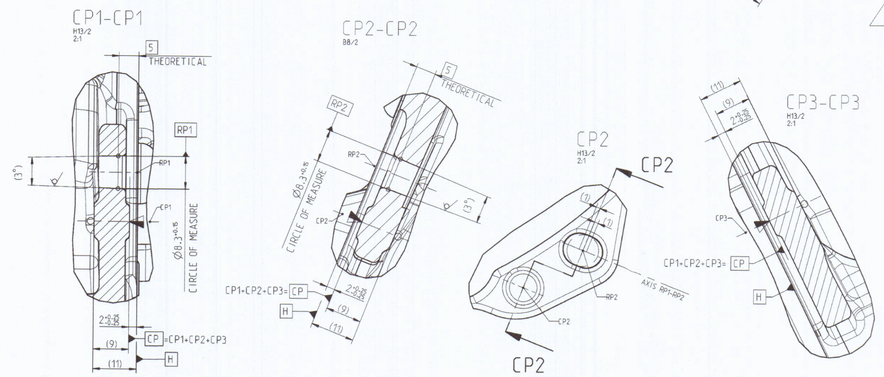

Rueckzugsriefen zulaessig bis Rmax 25
RETRACT ON MARKS PERMISSIBLE UNTIL Rmax 25

309260

GG/G 50309	0	<M>	e	-	36123	See sheet 4.	2014-11-03
	2	<C>	d	3	36125	CIS: NOTE AND CHAMFER SPECIFICATION ADDED:	2014-03-13
	0	<M>				B12/ ⌖ Ø0.4 G D M-K DELETED	
GV 30/10	0	<C>	c	1	35901	13: 30°+0.3 WAS 30°+0.1	2014-01-10
	0	<M>	b	-	250/5390	See sheet 3	2012-12-17
	0	<C>	a	2	35591	DIMENSIONS FOR CONTOUR MACHINING ADDED MACHINING START AND END BETWEEN H8 AND H10 WAS H9 AND H10	2012-09-27
			-	-	250/5907	MATURITY LEVEL OF SPECIFICATION 3 APPROVED	2012-06-14

Massstab / SCALE M: 1:1 (--)	Benennungsnummer / CHANGE NUMBER INDEX	Aenderungsanforderungsnummer / CHANGE REQUEST NO.	Aenderung --nur mittels CAD zulaessig PROD MODIFICATION --ONLY ALLOWED BY CAD-CHECK (MCA)	Datum / DATE

Allgemeintoleranzen fuer Laengenmasse: ISO 2768 - mK
Allgemeintoleranzen fuer Winkelmasse: ISO 2768 - H und geometrische Toleranzen: ISO 2768 - K und GENERAL TOLERANCES FOR LINEAR DIMENSIONS, FORM AND POSITION ISO 2768 - mK. DIMENSIONS, RADII AND ANGULAR DIMENSIONS ISO 2768 - m

Unbefugte Weitergabe sowie Vervielfaeltigung dieser Unterlage, gleichgueltig ob mit DRAW ING PROV IDED WITHOUT OBLIGATION IF SCALE AND RELEASE ARE NOT SHOWN.

Bearbeitungsrichtung / MACHINING DIRECTION: -

Bearbeitete Oberflaeche / SURFACE TO BE MACHINED: -