313073

GETRAG

Part Submission Warrant

Part Name: Speed Gear 6 | Customer Part Number: 250.1.3646.34

Shown on Drawing No.: 250.1.3646.34 | Organization Part #:

Engineering Change Level: a 36088 | Dated: 04-set-15

Additional Engineering Changes: | Dated:

Safety and/or Government Regulation ☐ Yes ☑ No | Purchase Order No.: | Weight (kg): 0.4680

Checking Aid No.: | Checking Aid Engineering Change Level: | Dated:

ORGANIZATION MANUFACTURING INFORMATION

GETRAG MODUGNO

Organization Name & Supplier/Vendor Code

VIA DEI CICLAMINI N°4

Street Address

MODUGNO BARI 70026 ITALY

City Region Postal Code Country

CUSTOMER SUBMITTAL INFORMATION

Customer Name/Division

Buyer/Buyer Code

DCT250

Application

MATERIALS REPORTING

Has customer-required Substances of Concern information been reported? ☐ Yes ☐ No ☑ n/a

Submitted by IMDS or other customer format:

Are polymeric parts identified with appropriate ISO marking codes? ☐ Yes ☐ No ☑ n/a

REASON FOR SUBMISSION (Check at least one)

- ☐ Initial Submission
- ☑ Engineering Change(s)
- ☐ Tooling: Transfer, Replacement, Refurbishment, or additional
- ☐ Correction of Discrepancy
- ☐ Tooling Inactive > than 1 year
- ☐ Change to Optional Construction or Material
- ☐ Supplier or Material Source Change
- ☐ Change in Part Processing
- ☐ Parts Produced at Additional Location
- ☐ Other - please specify below

REQUESTED SUBMISSION LEVEL (Check one)

- ☐ Level 1 - Warrant only (and for designated appearance items, an Appearance Approval Report) submitted to customer.
- ☐ Level 2 - Warrant with product samples and limited supporting data submitted to customer.
- ☑ Level 3 - Warrant with product samples and complete supporting data submitted to customer.
- ☐ Level 4 - Warrant and other requirements as defined by customer.
- ☐ Level 5 - Warrant with product samples and complete supporting data reviewed at organization's manufacturing location.

SUBMISSION RESULTS

The results for ☑ dimensional measurements ☐ material and functional tests ☐ appearance criteria ☐ statistical process package

These results meet all drawing and specification requirements: ☑ Yes ☐ NO (If "NO" - Explanation Required)

Mold / Cavity / Production Process

DECLARATION

I hereby affirm that the samples represented by this warrant are representative of our parts which were made by a process that meets all Production Part Approval Process Manual 4th Edition Requirements. I further affirm that these samples were produced at the production rate of ____ / ____ hours. I also certify that documented evidence of such compliance is on file and available for review. I have noted any deviations from this declaration below.

EXPLANATION / COMMENTS: **Technical cleanliness requirement updated on drawing (already in place)**

Is each Customer Tool properly tagged and numbered? ☑ Yes ☐ No ☑ n/a

Organization Authorized Signature: Camarda | Date: 15/10/2015

Print Name: Camarda Ettore | Phone No.: tel 390805858220 | Fax No.:

Title: Area 1 Manager | E-mail: ettore.camarda@magna.com

FOR CUSTOMER USE ONLY (IF APPLICABLE)

Part Warrant Disposition: ☑ Approved ☐ Rejected ☐ Other

Customer Signature: L Sneter | Date: 12.10.15

Print Name | Customer Tracking Number (optional)

March 2006 CFG-1001

Foglio QPS		Reparto /area	WLQ2	Laboratorio	Data creazione	28/11/13
		Macchina	N. A.		QPS-N°.	130006
Stab.	BARI	Processo (OP-N°)	Analisi di Contaminazione Particolari		Pagina	1 di 3
Tempo ciclo	00:00 min:sec	Nome pezzo	Tutti		GETRAG	
Tact time	N. A.	Tipo modello				

Fase N°	Titolo: Descrizione processo	tempo [mm:ss] Manuale	Auto	Spostamenti	Loghi	Esperienze/ Punti chiave Sicurezza - Qualità - Ambiente (Fare riferimento a QPS / WES per fasi complesse)
1	**Preparazione attrezzatura per irrorazione:** detergere con cura il piano della cappa. Disporre sotto cappa l'attrezzatura per l'irrorazione dei pezzi (caraffa graduata in vetro da 3 l, becher in vetro da 1 l, pompa a diaframma, tubo di aspirazione, ugello con manichetta). Agganciare il tubo di ingresso aria compressa della pompa al rubinetto della cappa. Serrare con una fascetta metallica. Detergere con cura l'attrezzatura con carta e detergente. Pulire particolarmente la manichetta di uscita del solvente (ugello di irrorazione) ed il tubo di aspirazione dello stesso.					Lavorare sotto cappa, indossare camice e guanti in nitrile. Caraffa e becher in vetro devono essere puliti ed asciutti. Al termine di questa fase, sostituire i guanti.
2	**Pulizia interna della pompa e dei tubi:** inserire 400 ml di solvente Houghton Fenella VD 2209 N nel becher, attivare la pompa aprendo il rubinetto dell'aria compressa e far defluire il solvente. Ripetere una seconda volta il processo.					Il solvente utilizzato per la pulizia è un rifiuto che va stoccato nel contenitore "Rifiuti Liquidi di Laboratorio cod. CER 16.05.06". Il contenitore è posizionato sotto cappa.
3	**Irrorazione del particolare:** sistemare i particolari, all'interno del contenitore utilizzato per il campionamento, sul piano cappa. Utilizzare la caraffa graduata da 3 l per versare nel contenitore 500 ml di solvente Fenella se si analizzano ruote oppure 800 ml se si analizzano alberi. Inserire il tubo di aspirazione del liquido nella bacinella, impostare il timer su 3 minuti, attivare il conto alla rovescia ed aprire completamente il rubinetto dell'aria compressa. Tutta la superficie del pezzo dev'essere irrorata. La distanza dell'ugello rispetto al pezzo dev'essere di circa 10 cm.					Il manometro a monte della pompa deve indicare 2.8+3 bar. Assicurarsi che l'ugello di irrorazione sia direzionato verso l'interno della bacinella. **Per le ruote:** irrorare ciascuna delle 2 facce del pezzo (poggiato sul fondo del contenitore) per 3 minuti. Eseguire un movimento rotatorio con l'ugello. **Per gli alberi:** irrorare ciascuna delle 2 estremità dell'abero (poggiato in verticale sul fondo del contenitore) per 3 minuti. Eseguire un movimento rotatorio con l'ugello in modo da raggiungere tutte le zone del pezzo, incluso l'eventuale foro.
4	**Risciaquo del particolare:** afferrare con cura il pezzo al termine dell'irrorazione ed estrarlo dal contenitore. Risciacquarlo aiutandosi con una spruzzetta da 250 ml riempita con solvente.					Raggiungere tutta la superfice del pezzo (anche le superfici interne dei fori).
5	**Risciaquo dell'attrezzatura:** risciaquare l'attrezzatura come al punto 2, con l'avvertenza di versare il solvente utilizzato nello stesso contenitore in cui è stato irrorato il particolare.					

Layout / Spiegazione / Aiuti visivi

1

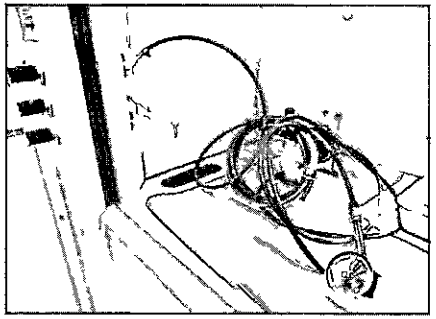

2

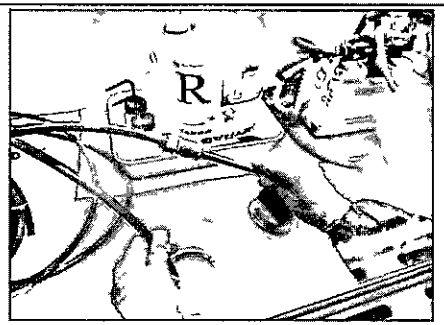

3

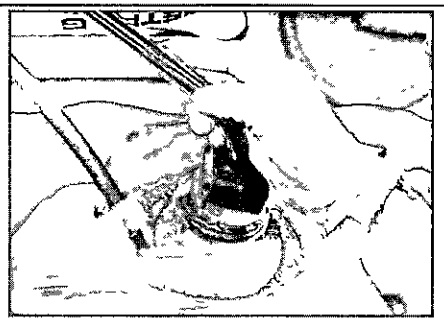

4

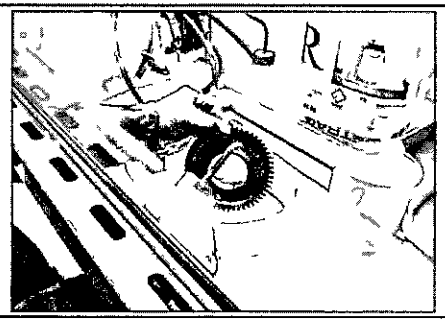

DPI necessari	Tempo tot.	00:00	00:00	00:00	=	00:00 min				creato/modificato da	F. Guerra / WLQ2
	Loghi	Sicurezza	Controllo qualità	Condizioni critiche	Inventario	Ambiente				Revisione-N°	01
										Data revisione	28.11.13

Archiviazione: 25.03 / S +12
Classe sicurezza: Proprietary
GO_F11_0001_07

Foglio QPS		Reparto /area	WLQ2	Laboratorio	Data creazione	28/11/13
		Macchina	N. A.		QPS-N°.	130006
Stab.	BARI	Processo (OP-N°)	Analisi di Contaminazione Particolari		Pagina	2 di 3
Tempo ciclo	00:00 min:sec	Nome pezzo	Tutti		GETRAG	
Tact time	N. A.	Tipo modello				

Fase N°	Titolo: Descrizione processo	tempo [mm:ss] Manuale	Auto	Spostamenti	Loghi	Esperienze/ Punti chiave Sicurezza - Qualità - Ambiente (Fare riferimento a QPS / WES per fasi complesse)
6	**Selezione del tipo di filtro:** il tipo di filtro da utilizzare dipende dalla norma di riferimento per la pulizia del particolare. Se la norma di riferimento è la **GN 4340-1**, si utilizzano filtri in nylon da 140 micron. Se la norma è la **GN 4340-2**, utilizzare filtri in nitrato di cellulosa da 5 micron.				◇	La norma di riferimento è indicata sul disegno del particolare. Se nessuna norma è citata sul disegno, si applica la GN 4340-1.
7	**Disidratazione e pesatura del filtro:** il filtro dev'essere disidratato in stufa per 30 minuti a 80°C, stabilizzato in essiccatore per 30 minuti e pesato alla bilancia analitica annotando il valore fino alla quarta cifra decimale.					E' obbligatorio pulire con alcol denaturato e carta la base della bilancia sulla quale verrà appoggiato il filtro.
8	**Preparazione attrezzatura per filtrazione:** Disporre l'attrezzatura per la filtrazione sotto cappa: pompa da vuoto, bacinella in plastica, beuta codata, supporto filtrante, sul quale si adagia il filtro, ed il bicchiere di filtrazione. Fissare il bicchiere al supporto del filtro per mezzo di pinza in metallo. Collegare infine il tubo di aspirazione della pompa da vuoto alla beuta codata.					Tutte le attrezzature devono essere pulite ed asciutte
9	**Filtrazione:** attivare il dispositivo di regolazione del vuoto, attivare la pompa e premere Run sul dispositivo di regolazione del vuoto. Il Set-Point deve essere impostato su 30 mbar. Procedere alla filtrazione versando lentamente il solvente nel bicchiere di filtrazione. Una volta versato tutto il solvente, risciacquare il contenitore aiutandosi con la spruzzetta riempita con solvente Fenella. Sciacquare infine il bicchiere di filtrazione, premere STOP sul dispositivo di regolazione del vuoto e spegnere la pompa.					Per impostare il set-point della pompa, agire con i pulsanti corrispondenti alle freccette per aumentare/abbassare la pressione. Una volta raggiunto il valore di 30 mbar premere OK. Per verificare il set-point della pompa, premere il pulsante P.set sul quadrante e poi ESC.

Layout / Spiegazione / Aiuti visivi

7

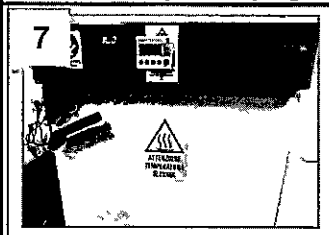

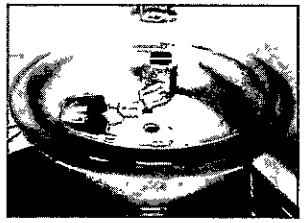

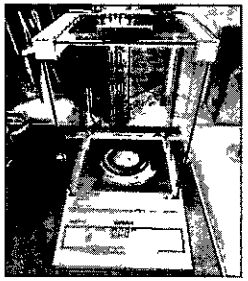

8

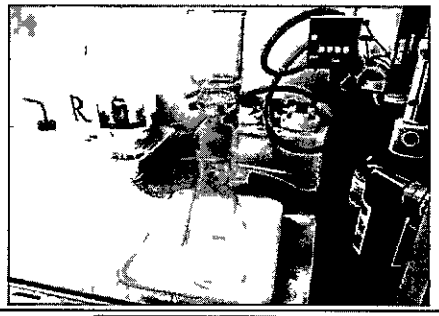

9

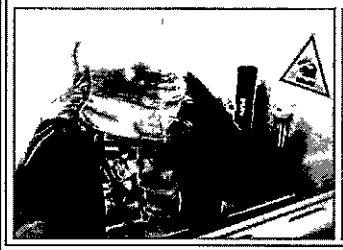

DPI necessari	Tempo tot.	00:00	00:00	00:00	=	00:00 min			creato/modificato da	F. Guerra / WLQ2
	Loghi	Sicurezza	Controllo qualità	Condizioni critiche	Inventario	Ambiente			Revisione-N° 01	Archiviazione: 25.03 / S +12 Classe sicurezza: Proprietary
									Data revisione 28.11.13	GO_F11_0001_07

Foglio QPS		Reparto /area	WLQ2	Laboratorio	Data creazione	28/11/13
		Macchina	N. A.		QPS-N°.	130006
Stab.	BARI	Processo (OP-N°)	Analisi di Contaminazione Particolari		Pagina	3 di 3
Tempo ciclo	00:00 min:sec	Nome pezzo	Tutti		GETRAG	
Tact time	N. A.	Tipo modello				

Fase N°	Titolo: Descrizione processo	tempo [mm:ss] Manuale	Auto	Spostamenti	Loghi	Esperienze/ Punti chiave Sicurezza - Qualità - Ambiente (Fare riferimento a QPS / WES per fasi complesse)
10	**Disidratazione e pesatura filtro dopo filtrazione:** disassemblare il sistema di filtrazione e prelevare il filtro con una pinzetta in acciaio inossidabile pulita. Riporre il filtro in un vetrino e procedere alla disidratazione, stabilizzazione e pesatura come descritto al punto 7. La differenza tra le due pesate (prima e dopo filtrazione) rappresenta il valore della contaminazione del componente. Calcolare il parametro Ga (contaminazione riferita a 1000 cm^2 di superficie) con la seguente formula: Valore in mg di contaminazione moltiplicato per 100'000, diviso per la superfice del particolare in mm^2					E' obbligatorio pulire con alcol denaturato e carta la base della bilancia sulla quale verrà appoggiato il filtro. Tutte le attrezzature devono essere pulite ed asciutte. La superficie del pezzo in mm^2 è indicata sul disegno dello stesso.
11	**Analisi dimensionale della contaminazione:** Il filtro dev'essere osservato per individuare la particella contaminante più grande. Si osserva il filtro (riposto nel vetrino) allo stereomicroscopio impostato a basso ingrandimento (in modo da inquadrare l'intero filtro). Si individua la zona in cui è presente la particella più grande e la si inquadra con il massimo ingrandimento (40 X). Si acquisisce l'immagine con il sw di acquisizione e analisi d'immagine (NIS-Elements), si misura la dimensione massima della particella trovata e si archivia l'immagine nell'apposita directory. Nel caso in cui la particella più grande trovata è non metallica (plastica o fiocco di fibre), si acquisisce oltre ad essa anche la foto della particella metallica di maggiori dimensioni eventualmente trovata.				◇	E' necessario pulire con cura lo stereomicroscopio ed il piano di lavoro dello stesso prima dell'analisi. Le foto delle particelle devono essere archiviate in: \\itb-s0011\bpm\+BPM_Public\WLQ\Contamination_Analyses\Residual_Oil_Contamination\Foto_contaminanti_pezzi

Layout / Spiegazione / Aiuti visivi

10

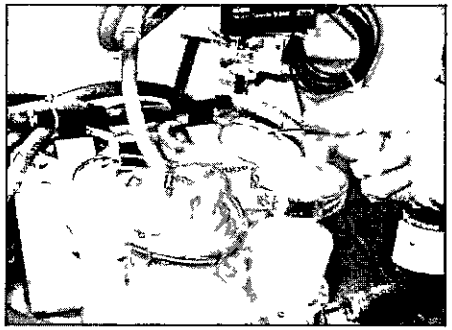

11

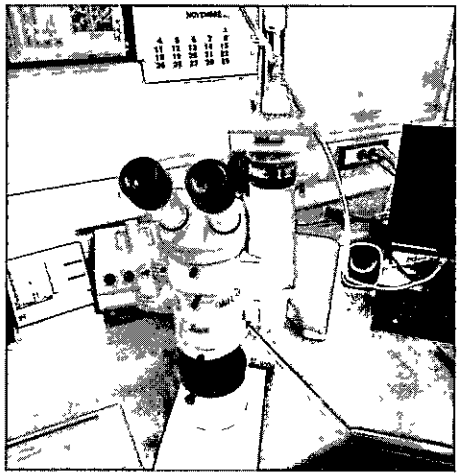

DPI necessari				Tempo tot.	00:00	00:00	00:00	=	00:00 min				creato/modificato da	F. Guerra / WLQ2
				Loghi	Sicurezza	Controllo qualità	Condizioni critiche	Inventario	Ambiente				Revisione-N° 01	Archiviazione: 25.03 / S +12 Classe sicurezza: Proprietary
													Data revisione 28.11.13	GO_F11_0001_07

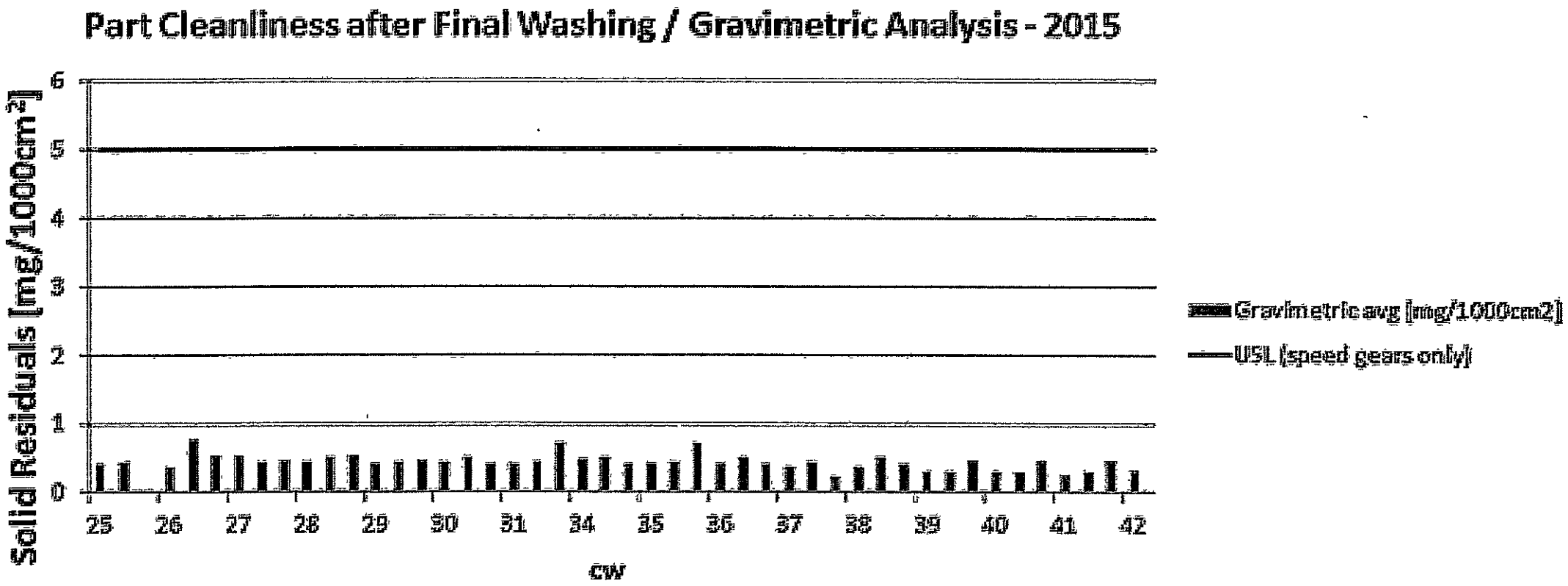
Part Cleanliness after Final Washing / Gravimetric Analysis - 2015
Solid Residuals [mg/1000cm²]
0
1
2
3
4
5
6
25
26
27
28
29
30
31
34
35
36
37
38
39
40
41
42
CW
Gravimetric avg [mg/1000cm2]
USL (speed gears only)

Drawing 3646 update from index "-" to "a"					
Short description:	a	1x	36088	Technische Sauberkeit/TECHNICAL CLEANLINESS aktualisiert/UPDATED	20150904

	PPAP Requirements	Required	Note	PPAP Docs updated
1	Design Records	Yes		YES
2	Authorized Engineering change documents	Yes	see dwg	YES
3	Customer Engineering approval	n.a.		
4	DFMEA	NO		
5	Process flow diagram(s)	NO		
6	PFMEA	Yes	Cleanliness spec. already in place	YES
7	Control plan	Yes	Cleanliness spec. already in place	YES
8	Measurement system analysis studies	NO		
9	Dimensional results	NO		
10	Records of Material / Performance test results	NO		
11	Initial process studies	NO		
12	Qualified laboratory documentation	NO		
13	Appearance Approval Report (A.A.R.)	n.a.		
14	Sample Production Parts	Yes		YES
15	Master sample	Yes		YES
16	Checking aids	n.a.		
17	Customer-Specific Requirements	NO		
18	Part Submission Warrant (PSW)	Yes		YES

	Other requirements			
1	PSW Raw part	NO		
2	PSW E.P. part	NO		
3	PSW Engagement Rings	NO		

GETRAG

Part Submission Warrant

Part Name: Speed Gear 6 | Customer Part Number: 250.1.4226.38

Shown on Drawing No.: 250.1.4226.38 | Organization Part #:

Engineering Change Level: b 36088 | Dated: 04-set-15

Additional Engineering Changes: | Dated:

Safety and/or Government Regulation ☐ Yes ☑ No | Purchase Order No.: | Weight (kg): 0.4670

Checking Aid No.: | Checking Aid Engineering Change Level: | Dated:

ORGANIZATION MANUFACTURING INFORMATION

GETRAG MODUGNO

Organization Name & Supplier/Vendor Code

VIA DEI CICLAMINI N°4

Street Address

MODUGNO BARI 70026 ITALY

City Region Postal Code Country

CUSTOMER SUBMITTAL INFORMATION

Customer Name/Division

Buyer/Buyer Code

DCT250

Application

MATERIALS REPORTING

Has customer-required Substances of Concern information been reported? ☐ Yes ☐ No ☑ n/a

Submitted by IMDS or other customer format:

Are polymeric parts identified with appropriate ISO marking codes? ☐ Yes ☐ No ☑ n/a

REASON FOR SUBMISSION (Check at least one)

- ☐ Initial Submission
- ☑ Engineering Change(s)
- ☐ Tooling: Transfer, Replacement, Refurbishment, or additional
- ☐ Correction of Discrepancy
- ☐ Tooling Inactive > than 1 year
- ☐ Change to Optional Construction or Material
- ☐ Supplier or Material Source Change
- ☐ Change in Part Processing
- ☐ Parts Produced at Additional Location
- ☐ Other - please specify below

REQUESTED SUBMISSION LEVEL (Check one)

- ☐ Level 1 - Warrant only (and for designated appearance items, an Appearance Approval Report) submitted to customer.
- ☐ Level 2 - Warrant with product samples and limited supporting data submitted to customer.
- ☑ Level 3 - Warrant with product samples and complete supporting data submitted to customer.
- ☐ Level 4 - Warrant and other requirements as defined by customer.
- ☐ Level 5 - Warrant with product samples and complete supporting data reviewed at organization's manufacturing location.

SUBMISSION RESULTS

The results for ☑ dimensional measurements ☐ material and functional tests ☐ appearance criteria ☐ statistical process package

These results meet all drawing and specification requirements: ☑ Yes ☐ NO (If "NO" - Explanation Required)

Mold / Cavity / Production Process

DECLARATION

I hereby affirm that the samples represented by this warrant are representative of our parts which were made by a process that meets all Production Part Approval Process Manual 4th Edition Requirements. I further affirm that these samples were produced at the production rate of ____ / ____ hours. I also certify that documented evidence of such compliance is on file and available for review. I have noted any deviations from this declaration below.

EXPLANATION / COMMENTS: **Technical cleanliness requirement updated on drawing (already in place)**

Is each Customer Tool properly tagged and numbered? ☐ Yes ☐ No ☑ n/a

Organization Authorized Signature: Camarda | Date: 15/10/2015

Print Name: Camarda Ettore | Phone No.: tel 390805858220 | Fax No.:

Title: Area 1 Manager | E-mail: ettore.camarda@magna.com

FOR CUSTOMER USE ONLY (IF APPLICABLE)

Part Warrant Disposition: ☑ Approved ☐ Rejected ☐ Other

Customer Signature: | Date: 12.10.15

Print Name: | Customer Tracking Number (optional):

GETRAG

Part Submission Warrant

Part Name: Speed Gear 6 | Customer Part Number: 250.1.3877.36

Shown on Drawing No.: 250.1.3877.36 | Organization Part #:

Engineering Change Level: b 36088 | Dated: 04-set-15

Additional Engineering Changes: | Dated:

Safety and/or Government Regulation ☐ Yes ☑ No | Purchase Order No.: | Weight (kg): 0.4480

Checking Aid No.: | Checking Aid Engineering Change Level: | Dated:

ORGANIZATION MANUFACTURING INFORMATION

GETRAG MODUGNO

Organization Name & Supplier/Vendor Code

VIA DEI CICLAMINI N°4

Street Address

MODUGNO BARI 70026 ITALY

City Region Postal Code Country

CUSTOMER SUBMITTAL INFORMATION

Customer Name/Division

Buyer/Buyer Code

DCT250

Application

MATERIALS REPORTING

Has customer-required Substances of Concern information been reported? ☐ Yes ☐ No ☑ n/a

Submitted by IMDS or other customer format:

Are polymeric parts identified with appropriate ISO marking codes? ☐ Yes ☐ No ☑ n/a

REASON FOR SUBMISSION (Check at least one)

- ☐ Initial Submission
- ☑ Engineering Change(s)
- ☐ Tooling: Transfer, Replacement, Refurbishment, or additional
- ☐ Correction of Discrepancy
- ☐ Tooling Inactive > than 1 year
- ☐ Change to Optional Construction or Material
- ☐ Supplier or Material Source Change
- ☐ Change in Part Processing
- ☐ Parts Produced at Additional Location
- ☐ Other - please specify below

REQUESTED SUBMISSION LEVEL (Check one)

- ☐ Level 1 - Warrant only (and for designated appearance items, an Appearance Approval Report) submitted to customer.
- ☐ Level 2 - Warrant with product samples and limited supporting data submitted to customer.
- ☑ Level 3 - Warrant with product samples and complete supporting data submitted to customer.
- ☐ Level 4 - Warrant and other requirements as defined by customer.
- ☐ Level 5 - Warrant with product samples and complete supporting data reviewed at organization's manufacturing location.

SUBMISSION RESULTS

The results for ☑ dimensional measurements ☐ material and functional tests ☐ appearance criteria ☐ statistical process package

These results meet all drawing and specification requirements: ☑ Yes ☐ NO (If "NO" - Explanation Required)

Mold / Cavity / Production Process

DECLARATION

I hereby affirm that the samples represented by this warrant are representative of our parts which were made by a process that meets all Production Part Approval Process Manual 4th Edition Requirements. I further affirm that these samples were produced at the production rate of ____ / ____ hours. I also certify that documented evidence of such compliance is on file and available for review. I have noted any deviations from this declaration below.

EXPLANATION / COMMENTS: **Technical cleanliness requirement updated on drawing (already in place)**

Is each Customer Tool properly tagged and numbered? ☐ Yes ☐ No ☑ n/a

Organization Authorized Signature | Date: 15/10/2015

Print Name: Camarda Ettore | Phone No.: tel 390805858220 | Fax No.:

Title: Area 1 Manager | E-mail: ettore.camarda@magna.com

FOR CUSTOMER USE ONLY (IF APPLICABLE)

Part Warrant Disposition: ☑ Approved ☐ Rejected ☐ Other

Customer Signature | Date: 15.10.15

Print Name | Customer Tracking Number (optional)

GETRAG

Part Submission Warrant

Part Name: Speed Gear 6 | Customer Part Number: 250.1.4321.35

Shown on Drawing No.: 250.1.4321.35 | Organization Part #:

Engineering Change Level: a 36088 | Dated: 04-set-15

Additional Engineering Changes: | Dated:

Safety and/or Government Regulation ☐ Yes ☑ No | Purchase Order No.: | Weight (kg): 0.4670

Checking Aid No.: | Checking Aid Engineering Change Level: | Dated:

ORGANIZATION MANUFACTURING INFORMATION

GETRAG MODUGNO

Organization Name & Supplier/Vendor Code

VIA DEI CICLAMINI N°4

Street Address

MODUGNO BARI 70026 ITALY

City Region Postal Code Country

CUSTOMER SUBMITTAL INFORMATION

Customer Name/Division

Buyer/Buyer Code

DCT250

Application

MATERIALS REPORTING

Has customer-required Substances of Concern information been reported? ☐ Yes ☐ No ☑ n/a

Submitted by IMDS or other customer format:

Are polymeric parts identified with appropriate ISO marking codes? ☐ Yes ☐ No ☑ n/a

REASON FOR SUBMISSION (Check at least one)

- ☐ Initial Submission
- ☑ Engineering Change(s)
- ☐ Tooling: Transfer, Replacement, Refurbishment, or additional
- ☐ Correction of Discrepancy
- ☐ Tooling Inactive > than 1 year
- ☐ Change to Optional Construction or Material
- ☐ Supplier or Material Source Change
- ☐ Change in Part Processing
- ☐ Parts Produced at Additional Location
- ☐ Other - please specify below

REQUESTED SUBMISSION LEVEL (Check one)

- ☐ Level 1 - Warrant only (and for designated appearance items, an Appearance Approval Report) submitted to customer.
- ☐ Level 2 - Warrant with product samples and limited supporting data submitted to customer.
- ☑ Level 3 - Warrant with product samples and complete supporting data submitted to customer.
- ☐ Level 4 - Warrant and other requirements as defined by customer.
- ☐ Level 5 - Warrant with product samples and complete supporting data reviewed at organization's manufacturing location.

SUBMISSION RESULTS

The results for ☑ dimensional measurements ☐ material and functional tests ☐ appearance criteria ☐ statistical process package

These results meet all drawing and specification requirements: ☑ Yes ☐ NO (If "NO" - Explanation Required)

Mold / Cavity / Production Process

DECLARATION

I hereby affirm that the samples represented by this warrant are representative of our parts which were made by a process that meets all Production Part Approval Process Manual 4th Edition Requirements. I further affirm that these samples were produced at the production rate of ____ / ____ hours. I also certify that documented evidence of such compliance is on file and available for review. I have noted any deviations from this declaration below.

EXPLANATION / COMMENTS: **Technical cleanliness requirement updated on drawing (already in place)**

Is each Customer Tool properly tagged and numbered? ☐ Yes ☐ No ☑ n/a

Organization Authorized Signature: Camarda | Date: 15/10/2015

Print Name: Camarda Ettore | Phone No.: tel 390805858220 | Fax No.:

Title: Area 1 Manager | E-mail: ettore.camarda@magna.com

FOR CUSTOMER USE ONLY (IF APPLICABLE)

Part Warrant Disposition: ☑ Approved ☐ Rejected ☐ Other

Customer Signature | Date: 15.10.15

Print Name | Customer Tracking Number (optional)

Design Release:	2015-10-09	Agapi.Raidt
Function Release:	2015-10-13	Steffen.Horlacher
Geardata Release:	not required	
Material Release:	not required	
SAP Release:	2015-10-28	Hartmut.Kobald
Document Status:	approved	

Fuer Freigabeinformation freihalten! KEEP FREE FOR RELEASE INFORMATION!

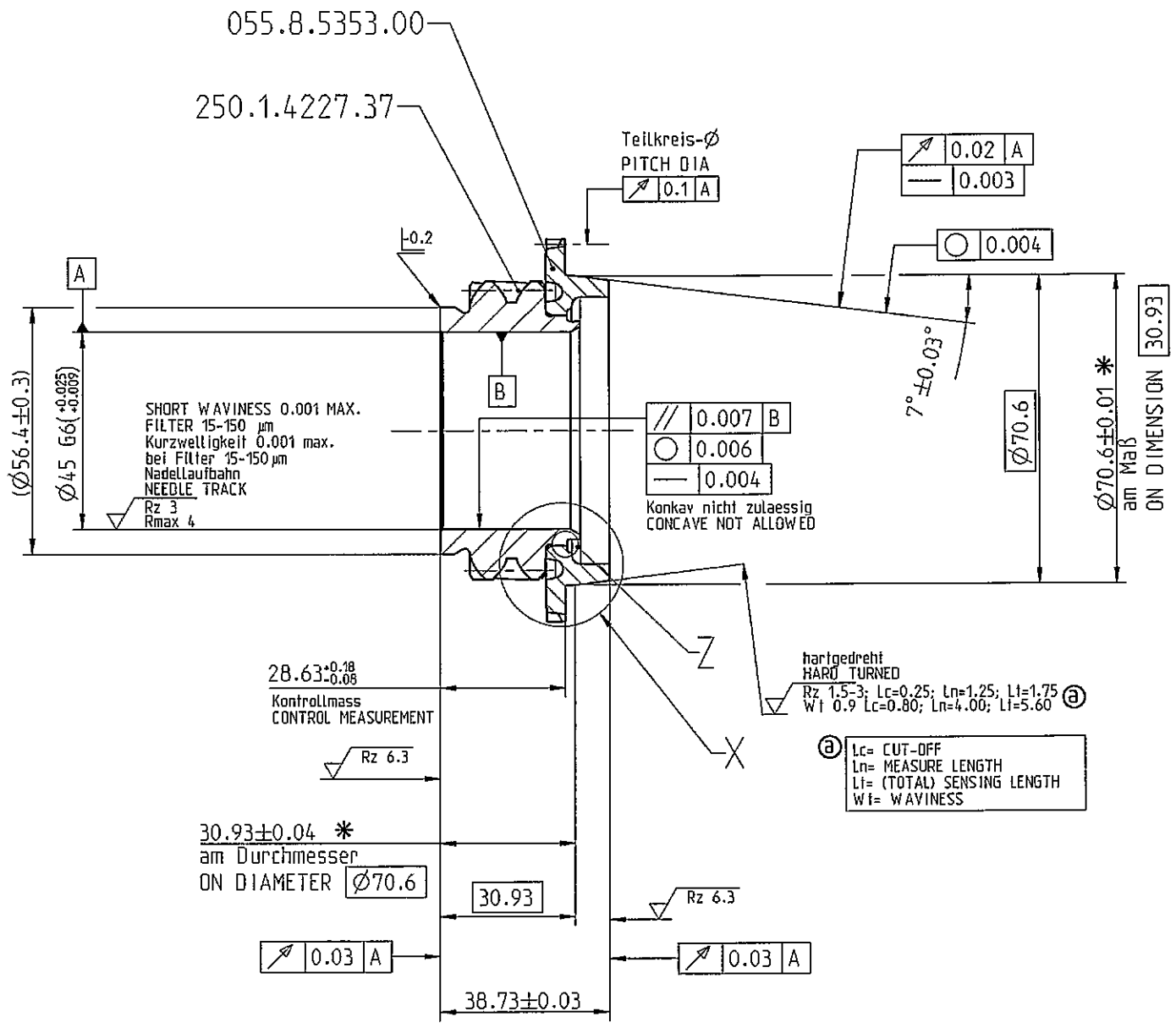

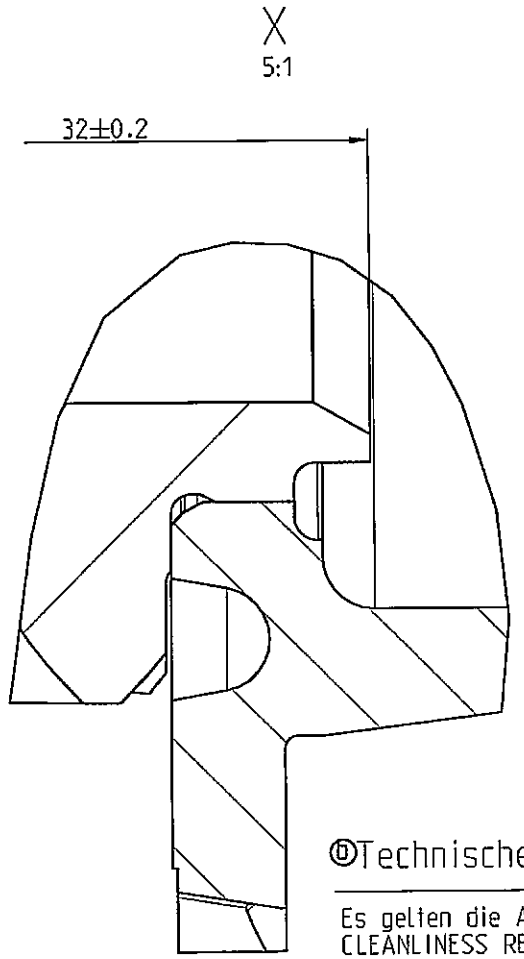

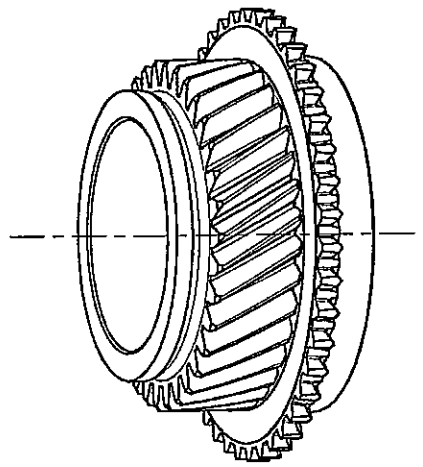

Z
unmassstaeblich
not to scale

* wahlweise Messung
ⓐ ALTERNATIVE MEASUREMENT

ⓓ Technische Sauberkeit / TECHNICAL CLEANLINESS:

Es gelten die Anforderungen nach GN 4340-1
CLEANLINESS REQUIREMENTS OF THE GN 4340-1 HAVE TO BE ABIDED

Fuer Getrag internen Gebrauch / FOR GETRAG INTERNAL USE
Bauteiloberflaeche fuer Pruefung / SURFACE TO PROVE:
302 cm²

(V)

-0.3 -0.1 (L)

Naehere Angaben zur Verzahnung
siehe Verzahnungsblatt
250.1.4227.37
FURTHER GEAR DATA SEE
DATA SHEET NUMBER
250.1.4227.37

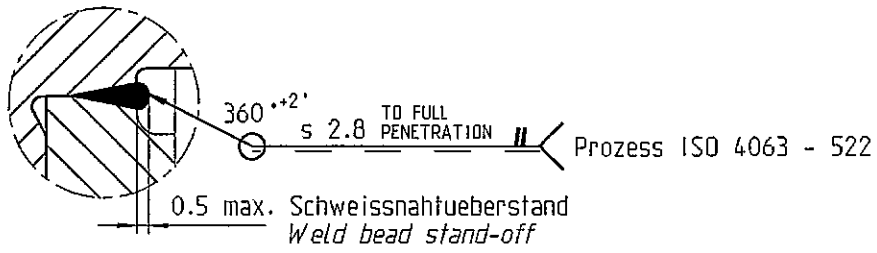

CHECKED ACCORDING ENGINEERING SPECIFICATION
S 3S7R-7M161-AA. DEVIATION FROM THIS SPECIFICATION:
LONGITUDINAL MICRO CRACKS IN THE WELDING MATERIAL ARE
PERMISSIBLE TO A TOTAL OF 2% AROUND THE CIRCUMFERENCE.

Fuer GETRAG intern:
Dieses Bauteil ist Bestandteil der Gruppen Nummer 250.1.6488.00
Lieferant/Hersteller: Bari
GETRAG INTERNAL ONLY:
THIS COMPONENT IS PART OF GROUP NUMBER 250.1.6488.00
SUPPLIER/MANUFACTURER: Bari

Fuer die Lieferung und Kennzeichnung im Data Matrix Code
(Bauteil und/oder Verpackung)
muss die Gruppen Nummer 250.1.6488.00 verwendet werden.
FOR SHIPPMENT AND IDENTIFICATION WITHIN THE DATA MATRIX CODE
(COMPONENT AND/OR PACKAGING)
THE GROUP NUMBER 250.1.6488.00 HAS TO BE USED.

PPAP nach / ACCORDING TO 250.1.4226.38

GCG 803001	0	<M>					
	0	<C>					
GN 3010	0	<M>					
	0	<C>	b	1x	36088	Technische Sauberkeit/TECHNICAL CLEANLINESS aktualisiert/UPDATED	20150904
	0	<A>	a	3x	35670	Oberflaechenbearbeitung/SURFACE FINISH geaendert/CHANGED; Text neu/TEXT NEW; wahlweise Messung/ALTERNATIVE MEASUREMENT war/WAS wahlweise Messung/OPTIONAL MEASUREMENT	20140811
CAD Pro/Engineer			---	---	35834	Spezifikationsreifegrad F erteilt / MATURITY LEVEL OF SPECIFICATION F APPROVED	20140403

Sss PPAP DOC. 3646.34 "2"

Massstab / SCALE M: 1:1 (--)	Buchst. CHANGE INDEX	Anzahl NUMBER	Aend.-Nr. CHANGE ORDER NO.	Aenderung MODIFICATION --nur mittels CAD zulaessig: FMEA uebergruefen-- --ONLY ALLOWED BY CAD; CHECK FMEA--	Datum DATE

Allgemeintoleranzen fuer Laengenmasse, Form und Lage ISO 2768 - mK gebrochene Kanten, Radien und Winkelmasse ISO 2768 - v
GENERAL TOLERANCES FOR LINEAR DIMENSIONS, FORM AND POSITION ISO 2768 - mK; CHAMFERS, RADII AND ANGULAR DIMENSIONS ISO 2768 - v

Informationen auf dieser Zeichnung sind ohne Angaben zu Verwendung und Freigabe unverbindlich.
INFORMATION ON THIS DRAWING PROVIDED WITHOUT OBLIGATION IF USAGE AND RELEASE ARE NOT SHOWN.

Auswertung der Durchmessermessung erfolgt nach der Gauss-Methode (Arithmetischer Mittelwert)
EVALUATION OF THE DIAMETER MEASUREMENT IS CARRIED OUT ACCORDING TO THE GAUSS METHOD (ARITHMETICAL MEAN VALUE)

Form- und Lagetolerierung FORM AND POSITION TOLERANCES EN ISO 1101	Tolerierung TOLERANCING ISO 8015	Oberflaechenangaben SURFACE TEXTURE GN 4005	Werkstueckkanten BREAK EDGES ISO 13715

Werkstoff / MATERIAL

Halbzeug SEMI-FINISHED -

oeltenetzte Oberflaeche OIL WETTED SURFACE 0 mm²

Gesamtoberflaeche SURFACE AREA 0 mm² Masse MASS 0.467 kg

GETRAG
Getriebe- und Zahnradfabrik Hermann Hagenmeyer GmbH & Cie KG

Schutzvermerk nach ISO 16016 beachten
PROTECTION PER ISO 16016

Benennung / ITEM NAME: SPEED GEAR 6TH CPL.
Schaltrad 6. Gang kpl.

Artikel-Nr./ ITEM NO.: 2501422638
CAD-Modell: 2501422638

Blatt/SHEET 1 von/OF 1 | Reifegrad MATURITY: F | Format SIZE: A2

Ersatz fuer SUBSTITUTE FOR -

INTRALINK DATA	CHECKED IN BY	CHECKED IN ON: dd.mm.yyyy hh.mm.ss	VERSION
Zchng / DRW:	Agapi.Raidt	09.10.2015 08:01:28	6
MODEL:	Agapi.Raidt	04.09.2015 12:11:31	6+

Design Release:	2015-10-09	Agapl.Raidt
Function Release:	2015-10-13	Steffen.Horlacher
Geardata Release:	not required	
Material Release:	not required	
SAP Release:	2015-10-28	Hartmut.Kobald
Document Status:	approved	

Fuer Freigabeinformation freihalten! KEEP FREE FOR RELEASE INFORMATION!

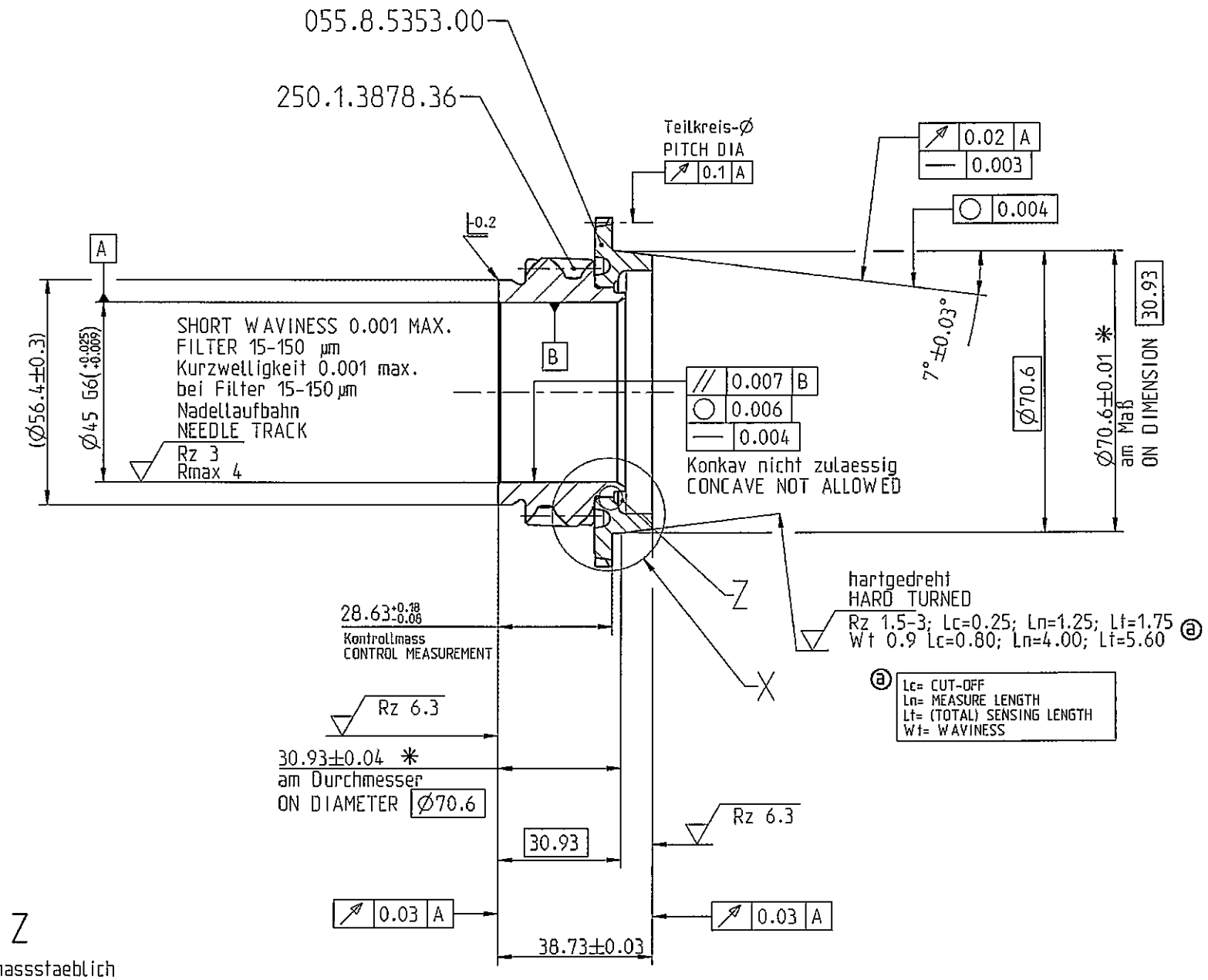

ⓐ Lc= CUT-OFF
Ln= MEASURE LENGTH
Lt= (TOTAL) SENSING LENGTH
Wt= WAVINESS

X
5:1

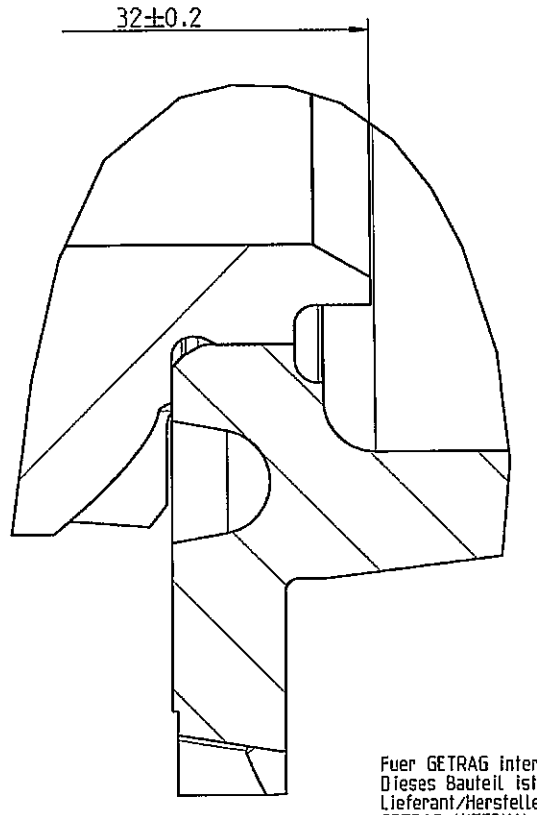

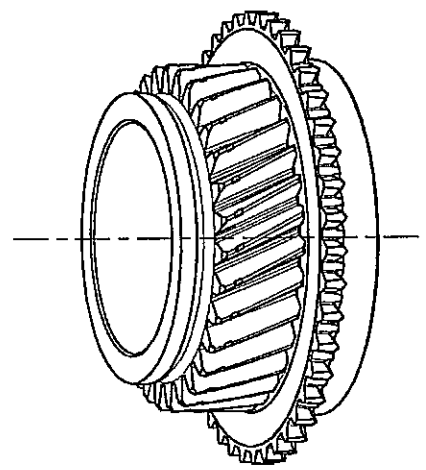

Fuer GETRAG intern:
Dieses Bauteil ist Bestandteil der Gruppen Nummer 250.1.6489.00
Lieferant/Hersteller: Bari
GETRAG INTERNAL ONLY:
THIS COMPONENT IS PART OF GROUP NUMBER 250.1.6489.00
SUPPLIER/MANUFACTURER: Bari

Fuer die Lieferung und Kennzeichnung im Data Matrix Code (Bauteil und/oder Verpackung) muss die Gruppen Nummer 250.1.6489.00 verwendet werden.
FOR SHIPPMENT AND IDENTIFICATION WITHIN THE DATA MATRIX CODE (COMPONENT AND/OR PACKAGING) THE GROUP NUMBER 250.1.6489.00 HAS TO BE USED.

PPAP nach / ACCORDING TO 250.1.3877.36

Naehere Angaben zur Verzahnung
siehe Verzahnungsblatt
250.1.3878.36
FURTHER GEAR DATA SEE
DATA SHEET NUMBER
250.1.3878.36

Z
unmassstaeblich
not to scale

✱ wahlweise Messung
ⓐ ALTERNATIVE MEASUREMENT

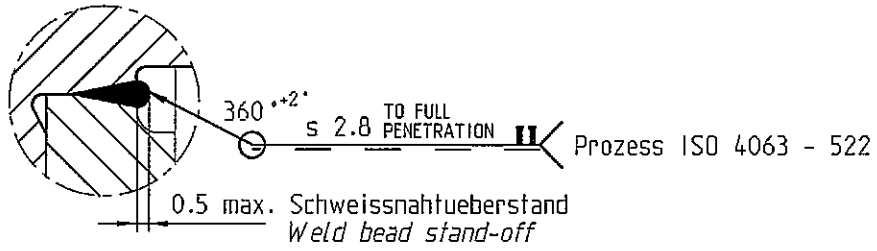

CHECKED ACCORDING ENGINEERING SPECIFICATION
S 3S7R-7M161-AA. DEVIATION FROM THIS SPECIFICATION:
LONGITUDINAL MICRO CRACKS IN THE WELDING MATERIAL ARE PERMISSIBLE TO A TOTAL OF 2% AROUND THE CIRCUMFERENCE.

ⓑ Technische Sauberkeit / TECHNICAL CLEANLINESS:

Es gelten die Anforderungen nach GN 4340-1
CLEANLINESS REQUIREMENTS OF THE GN 4340-1 HAVE TO BE ABIDED

Fuer Getrag internen Gebrauch / FOR GETRAG INTERNAL USE
Bauteiloberflaeche fuer Pruefung / SURFACE TO PROVE:
295 cm²

GCG 803001	0	<M>				SEE PPAP DOC. 3646.34 "2"	
	0	<C>					
GN 3010	0	<M>					
	0	<C>	b	1x	36088	Technische Sauberkeit/TECHNICAL CLEANLINESS aktualisiert/UPDATED	20150904
	0	<A>	a	3x	35670	Oberflaechenbearbeitung/SURFACE FINISH geaendert/CHANGED: Text neu/TEXT NEW; wahlweise Messung/ALTERNATIVE MEASUREMENT war/WAS wahlweise Messung/OPTIONAL MEASUREMENT	20140811
CAD Prof Engineer			---	---	35834	Spezifikationsreifegrad F erteilt / MATURITY LEVEL OF SPECIFICATION F APPROVED	20140404

Massstab / SCALE	Buchst. CHANGE INDEX	Anzahl NUMBER	Aend.-Nr. CHANGE ORDER NO.	Aenderung --nur mittels CAD zulaessig; FMEA ueberpruefen-- MODIFICATION --ONLY ALLOWED BY CAD; CHECK FMEA--	Datum DATE
M: 1:1 (--)					

Allgemeintoleranzen fuer Laengenmasse, Form und Lage ISO 2768 - mH gebrochene Kanten, Radien und Winkelmasse ISO 2768 - v
GENERAL TOLERANCES FOR LINEAR DIMENSIONS, FORM AND POSITION ISO 2768 - mH; CHAMFERS, RADII AND ANGULAR DIMENSIONS ISO 2768 - v

Informationen auf dieser Zeichnung sind ohne Angaben zu Verwendung und Freigabe unverbindlich.
INFORMATION ON THIS DRAWING PROVIDED WITHOUT OBLIGATION IF USAGE AND RELEASE ARE NOT SHOWN.

Auswertung der Durchmessermessung erfolgt nach der Gauss-Methode (Arithmetischer Mittelwert)
EVALUATION OF THE DIAMETER MEASUREMENT IS CARRIED OUT ACCORDING TO THE GAUSS METHOD (ARITHMETICAL MEAN VALUE)

Form- und Lagetolerierung FORM AND POSITION TOLERANCES EN ISO 1101	Tolerierung TOLERANCING ISO 8015	Oberflaechenangaben SURFACE TEXTURE GN 4005	Werkstueckkanten BREAK EDGES ISO 13715

Werkstoff / MATERIAL

Halbzeug SEMI-FINISHED –

oelbenetzte Oberflaeche OIL WETTED SURFACE 0 mm²

Gesamtoberflaeche SURFACE AREA 0 mm²

Masse MASS 0.448 kg

GETRAG
Getriebe- und Zahnradfabrik Hermann Hagenmeyer GmbH & Cie KG

Schutzvermerk nach ISO 16016 beachten
PROTECTION PER ISO 16016

Benennung / ITEM NAME
SPEED GEAR 6TH CPL.
Schaltrad 6. Gang kpl.

Artikel-Nr./ ITEM NO. 2501387736
CAD-Modell: 2501387736

Blatt/SHEET 1 von/OF 1

Reifegrad MATURITY F

Format SIZE A2

Ersatz fuer SUBSTITUTE FOR –

INTRALINK DATA	CHECKED IN BY	CHECKED IN DN: dd.mm.yyyy hh:mm:ss	VERSION
Zchng / DRW:	Agapl.Raidt	09.10.2015 08:25:56	7
MODEL:	Agapl.Raidt	04.09.2015 14:19:42	6+

Design Release:	2015-10-09	Agapi.Raidt
Function Release:	2015-10-13	Steffen.Horlacher
Geardata Release:	not required	
Material Release:	not required	
SAP Release:	2015-10-28	Hartmut.Kobald
Document Status:	approved	

Fuer Freigabeinformation freihalten! KEEP FREE FOR RELEASE INFORMATION!

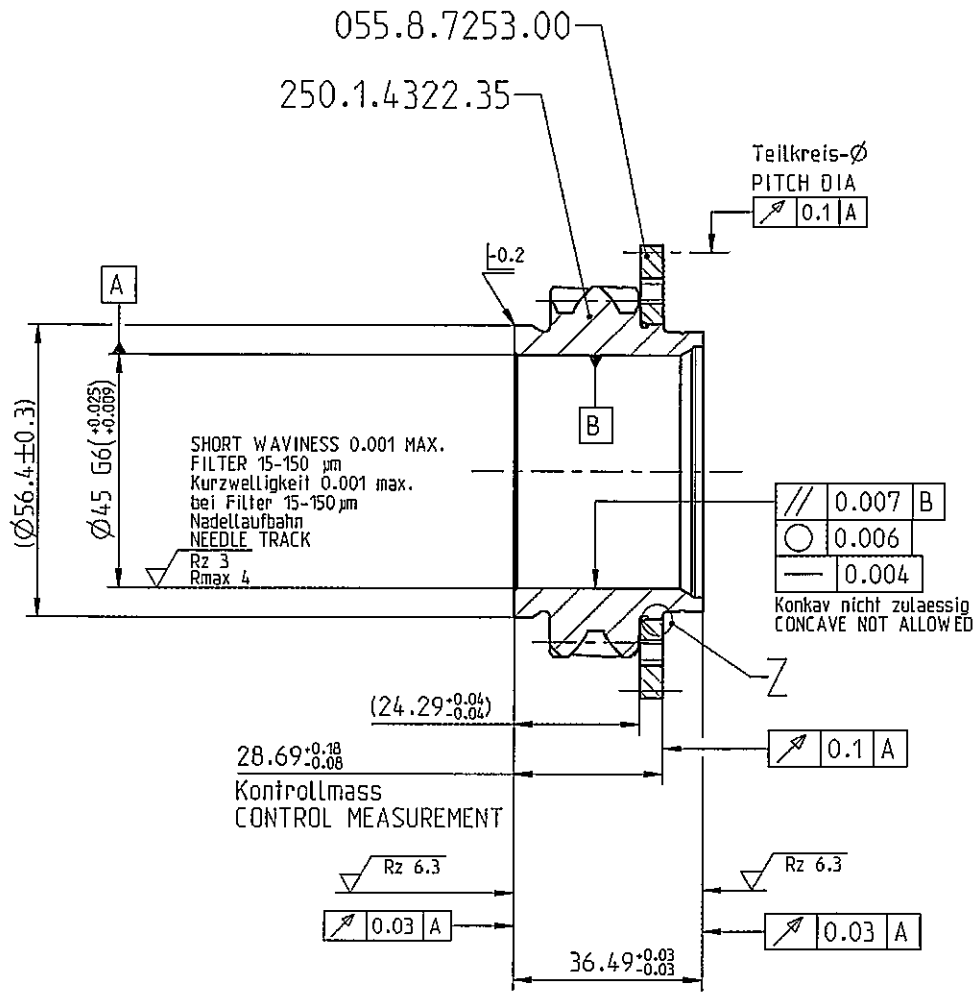

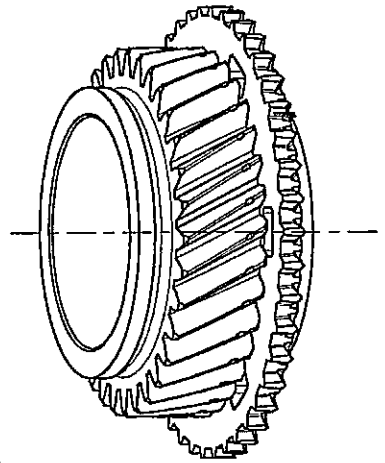

Fuer GETRAG intern:
Dieses Bauteil ist Bestandteil der Gruppen Nummer 250.1.6484.00
Lieferant/Hersteller: Bari
GETRAG INTERNAL ONLY:
THIS COMPONENT IS PART OF GROUP NUMBER 250.1.6484.00
SUPPLIER/MANUFACTURER: Bari

Fuer die Lieferung und Kennzeichnung im Data Matrix Code
(Bauteil und/oder Verpackung)
muss die Gruppen Nummer 250.1.6484.00 verwendet werden.
FOR SHIPPMENT AND IDENTIFICATION WITHIN THE DATA MATRIX CODE
(COMPONENT AND/OR PACKAGING)
THE GROUP NUMBER 250.1.6484.00 HAS TO BE USED.

PPAP nach / ACCORDING TO 250.1.4321.35

ⓐ Technische Sauberkeit / TECHNICAL CLEANLINESS:

Es gelten die Anforderungen nach GN 4340-1
CLEANLINESS REQUIREMENTS OF THE GN 4340-1 HAVE TO BE ABIDED

Fuer Getrag internen Gebrauch / FOR GETRAG INTERNAL USE
Bauteiloberflaeche fuer Pruefung / SURFACE TO PROVE:
272 cm²

Naehere Angaben zur Verzahnung
siehe Verzahnungsblatt
250.1.4322.35
FURTHER GEAR DATA SEE
DATA SHEET NUMBER
250.1.4322.35

Z
unmassstaeblich
not to scale

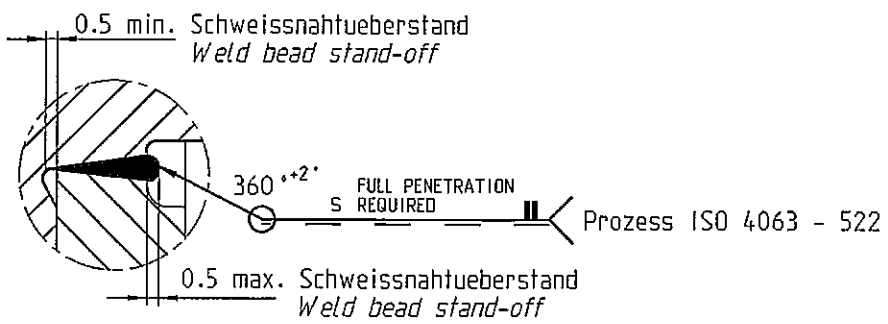

CHECKED ACCORDING ENGINEERING SPECIFICATION
S 3S7R-7M161-AA. DEVIATION FROM THIS SPECIFICATION:
LONGITUDINAL MICRO CRACKS IN THE WELDING MATERIAL ARE
PERMISSIBLE TO A TOTAL OF 2% AROUND THE CIRCUMFERENCE.

GCG/TS 803001	0	<M>				See PPAP DOC	
	0	▽					
GN 3010	0	<M>				3646.34 "a"	
	0	<C>					
	0	<A>					
CAD Pro/Engineer			a	1x	36088	Technische Sauberkeit/TECHNICAL CLEANLINESS aktualisiert/UPDATED	20150904
			---	---	36193_1	Spezifikationsreifegrad F erteilt / SPECIFICATION MATURITY LEVEL F APPROVED	20141027

Massstab / SCALE	Buchst. CHANGE INDEX	Anzahl NUMBER	Aend.-Nr. CHANGE REQUEST NO.	Aenderung MODIFICATION	Datum DATE
M: 1:1 (--)				--nur mittels CAD zulaessig; FMEA ueberpruefen-- --ONLY ALLOWED BY CAD; CHECK FMEA--	

Allgemeintoleranzen fuer Laengenmasse.
Form und Lage ISO 2768 - mH gebrochene Kanten, Radien und Winkelmasse ISO 2768 - v
GENERAL TOLERANCES FOR LINEAR DIMENSIONS, FORM AND POSITION ISO 2768 - mH; CHAMFERS, RADII AND ANGULAR DIMENSIONS ISO 2768 - v

Informationen auf dieser Zeichnung sind ohne Angaben zu Verwendung und Freigabe unverbindlich.
INFORMATION ON THIS DRAWING PROVIDED WITHOUT OBLIGATION IF USAGE AND RELEASE ARE NOT SHOWN.

Auswertung der Durchmessermessung erfolgt nach der Gauss-Methode (Arithmetischer Mittelwert)
EVALUATION OF THE DIAMTER MEASUREMENT IS CARRIED OUT ACCORDING TO THE GAUSS METHOD (ARITHMETICAL MEAN VALUE)

Form- und Lagetolerierung FORM AND POSITION TOLERANCES EN ISO 1101	Tolerierung TOLERANCING ISO 8015	Oberflaechenangaben SURFACE TEXTURE GN 4005	Werkstueckkanten BREAK EDGES ISO 13715

Werkstoff / MATERIAL

Halbzeug SEMI-FINISHED –

oelbenetzte Oberflaeche OIL WETTED SURFACE 0 mm²

Gesamtoberflaeche SURFACE AREA 0 mm² Masse MASS 0.467 kg

GETRAG
Getriebe- und Zahnradfabrik Hermann Hagenmeyer GmbH & Cie KG

Schutzvermerk nach ISO 16016 beachten
PROTECTION PER ISO 16016

Benennung / ITEM NAME
SPEED GEAR 6TH CPL.
Schaltrad 6. Gang vst.

Artikel-Nr./ ITEM NO. 2501432135 — Blatt/SHEET 1 von/OF 1 — Reifegrad MATURITY F — Format SIZE A2

CAD-Modell: 2501432135

Ersatz fuer SUBSTITUTE FOR -

INTRALINK DATA	CHECKED IN BY	CHECKED IN DN. dd.mm.yyyy hh.mm:ss	VERSION
Zchng / DRW:	Agapi.Raidt	09.10.2015 09:47:51	5
MODEL:	Agapi.Raidt	04.09.2015 12:25:32	6+

Design Release:	2015-10-09	Agapi.Raidt
Function Release:	2015-10-13	Steffen.Horlacher
Geardata Release:	not required	
Material Release:	not required	
SAP Release:	2015-10-28	Hartmut.Kobald
Document Status:	approved	

Fuer Freigabeinformation freihalten! KEEP FREE FOR RELEASE INFORMATION!

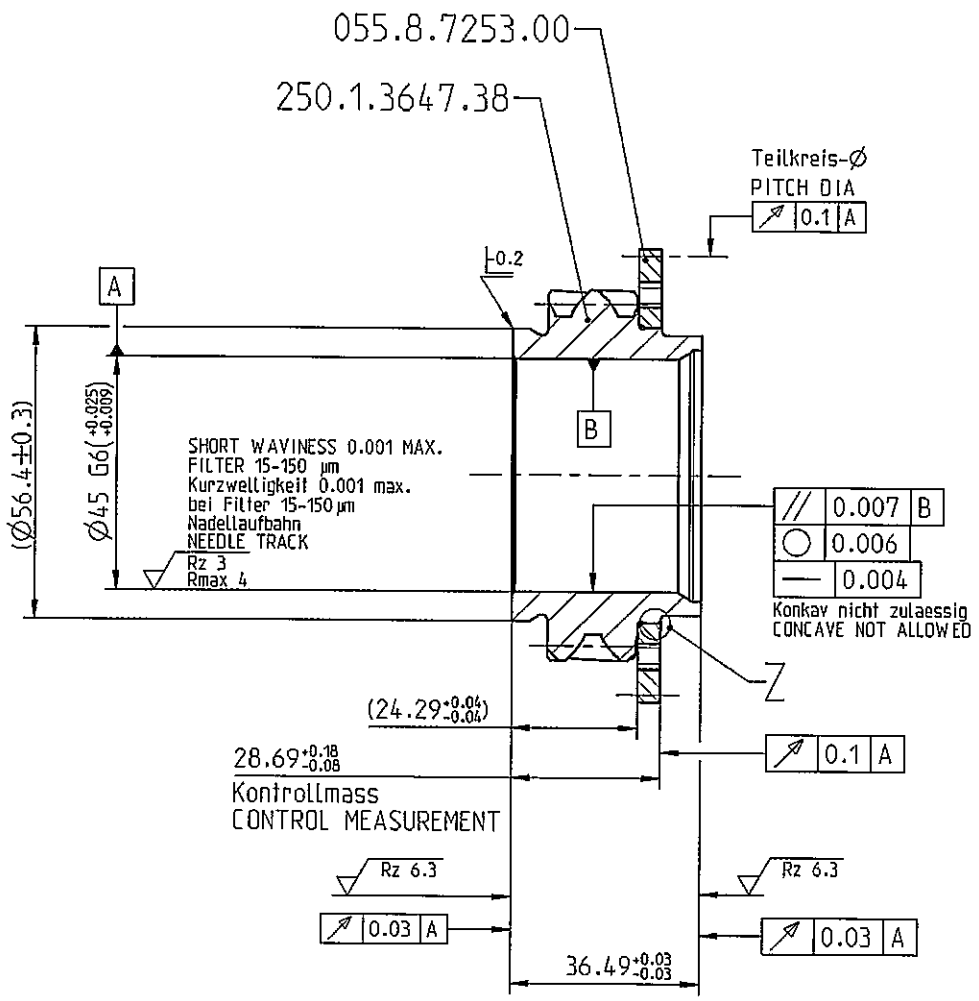

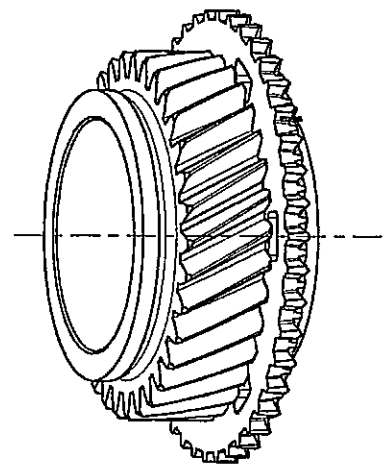

Fuer GETRAG intern:
Dieses Bauteil ist Bestandteil der Gruppen Nummer 250.1.6081.00
Lieferant/Hersteller: Bari
GETRAG INTERNAL ONLY:
THIS COMPONENT IS PART OF GROUP NUMBER 250.1.6081.00
SUPPLIER/MANUFACTURER: Bari

Fuer die Lieferung und Kennzeichnung im Data Matrix Code
(Bauteil und/oder Verpackung)
muss die Gruppen Nummer 250.1.6081.00 verwendet werden.
FOR SHIPPMENT AND IDENTIFICATION WITHIN THE DATA MATRIX CODE
(COMPONENT AND/OR PACKAGING)
THE GROUP NUMBER 250.1.6081.00 HAS TO BE USED.

PPAP nach / ACCORDING TO 250.1.3646.34

ⓐ Technische Sauberkeit / TECHNICAL CLEANLINESS:

Es gelten die Anforderungen nach GN 4340-1
CLEANLINESS REQUIREMENTS OF THE GN 4340-1 HAVE TO BE ABIDED

Fuer Getrag internen Gebrauch / FOR GETRAG INTERNAL USE
Bauteiloberflaeche fuer Pruefung / SURFACE TO PROVE:
272 cm²

Naehere Angaben zur Verzahnung
siehe Verzahnungsblatt
250.1.3647.38
FURTHER GEAR DATA SEE
DATA SHEET NUMBER
250.1.3647.38

Z
unmassstaeblich
not to scale

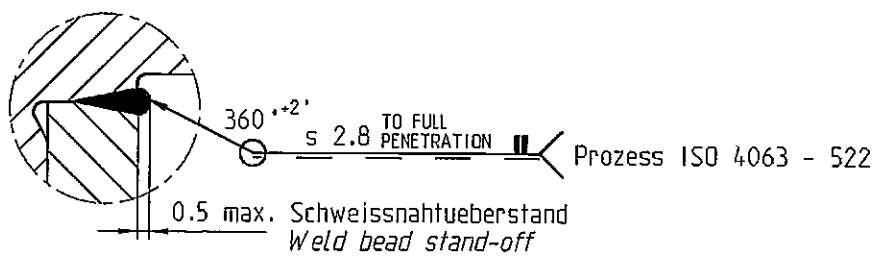

CHECKED ACCORDING ENGINEERING SPECIFICATION
S 3S7R-7M161-AA. DEVIATION FROM THIS SPECIFICATION:
LONGITUDINAL MICRO CRACKS IN THE WELDING MATERIAL ARE
PERMISSIBLE TO A TOTAL OF 2% AROUND THE CIRCUMFERENCE.

GCG 803001	0	<M>					
	0	<C>					
GN 3010	0	<M>					
	0	<C>					
	0	<A>					
CAD Pro/Engineer			a	1x	36088	Technische Sauberkeit/TECHNICAL CLEANLINESS aktualisiert/UPDATED	20150904
					35834	Spezifikationsreifegrad F erteilt / MATURITY LEVEL OF SPECIFICATION F APPROVED	20140404

Masstab / SCALE	Buchst. CHANGE INDEX	Anzahl NUMBER	Aend.-Nr. CHANGE ORDER NO.	Aenderung MODIFICATION	Datum DATE
M: 1:1 (--)				--nur mittels CAD zulaessig; FMEA ueberpruefen-- --ONLY ALLOWED BY CAD; CHECK FMEA--	

Allgemeintoleranzen fuer Laengenmasse, Form und Lage ISO 2768 - mH gebrochene Kanten, Radien und Winkelmasse ISO 2768 - v
GENERAL TOLERANCES FOR LINEAR DIMENSIONS, FORM AND POSITION ISO 2768 - mH; CHAMFERS, RADII AND ANGULAR DIMENSIONS ISO 2768 - v

Informationen auf dieser Zeichnung sind ohne Angaben zu Verwendung und Freigabe unverbindlich.
INFORMATION ON THIS DRAWING PROVIDED WITHOUT OBLIGATION IF USAGE AND RELEASE ARE NOT SHOWN.

Auswertung der Durchmessermessung erfolgt nach der Gauss-Methode (Arithmetischer Mittelwert)
EVALUATION OF THE DIAMETER MEASUREMENT IS CARRIED OUT ACCORDING TO THE GAUSS METHOD (ARITHMETICAL MEAN VALUE)

Form- und Lagetolerierung FORM AND POSITION TOLERANCES EN ISO 1101	Tolerierung TOLERANCING ISO 8015	Oberflaechenangaben SURFACE TEXTURE GN 4005	Werkstueckkanten BREAK EDGES ISO 13715

Werkstoff / MATERIAL

Halbzeug SEMI-FINISHED –

oelbenetzte Oberflaeche OIL WETTED SURFACE 0 mm²

Gesamtoberflaeche SURFACE AREA 0 mm² Masse MASS 0.468 kg

GETRAG
Getriebe- und Zahnradfabrik Hermann Hagenmeyer GmbH & Cie KG

Schutzvermerk nach ISO 16016 beachten
PROTECTION PER ISO 16016

Benennung / ITEM NAME: SPEED GEAR 6TH CPL.
Schaltrad 6. Gang vst.

Artikel-Nr./ ITEM NO.: 2501364634
CAD-Modell: 2501364634

Blatt/SHEET 1 von/OF 1 | Reifegrad MATURITY: F | Format SIZE: A2

Ersatz fuer SUBSTITUTE FOR –

INTRALINK DATA	CHECKED IN BY	CHECKED IN ON: dd.mm.yyyy hh.mm:ss	VERSION
Zchng / DRW:	Agapi.Raidt	09.10.2015 08:12:37	3
MODEL:	Agapi.Raidt	04.09.2015 13:27:18	6+