312537

GETRAG

# Part Submission Warrant

Part Name: Double Gear 2nd / Rev
Customer Part Number: 250.1.3693.00
Shown on Drawing No.: 250.1.3693.00
Organization Part #:
Engineering Change Level: e C008704_MIP_1, f C008704_MIP_2
Dated: 28-giu-17
Additional Engineering Changes:
Dated:
Safety and/or Government Regulation: ☐ Yes ☑ No
Purchase Order No.:
Weight (kg): 0.6300
Checking Aid No.:
Checking Aid Engineering Change Level:
Dated:

**ORGANIZATION MANUFACTURING INFORMATION**

GETRAG MODUGNO
Organization Name & Supplier/Vendor Code

VIA DEI CICLAMINI N°4
Street Address

MODUGNO BARI 70026 ITALY
City Region Postal Code Country

**CUSTOMER SUBMITTAL INFORMATION**

Customer Name/Division

Buyer/Buyer Code

DCT250
Application

**MATERIALS REPORTING**

Has customer-required Substances of Concern information been reported? ☐ Yes ☐ No ☑ n/a
Submitted by IMDS or other customer format:

Are polymeric parts identified with appropriate ISO marking codes? ☐ Yes ☐ No ☑ n/a

**REASON FOR SUBMISSION** (Check at least one)

- ☐ Initial Submission
- ☑ Engineering Change(s)
- ☐ Tooling: Transfer, Replacement, Refurbishment, or additional
- ☑ Correction of Discrepancy
- ☐ Tooling Inactive > than 1 year
- ☐ Change to Optional Construction or Material
- ☐ Supplier or Material Source Change
- ☐ Change in Part Processing
- ☐ Parts Produced at Additional Location
- ☐ Other - please specify below

**REQUESTED SUBMISSION LEVEL** (Check one)

- ☑ Level 1 - Warrant only (and for designated appearance items, an Appearance Approval Report) submitted to customer.
- ☐ Level 2 - Warrant with product samples and limited supporting data submitted to customer.
- ☐ Level 3 - Warrant with product samples and complete supporting data submitted to customer.
- ☐ Level 4 - Warrant and other requirements as defined by customer.
- ☐ Level 5 - Warrant with product samples and complete supporting data reviewed at organization's manufacturing location.

**SUBMISSION RESULTS**

The results for ☐ dimensional measurements ☐ material and functional tests ☐ appearance criteria ☐ statistical process package
These results meet all drawing and specification requirements: ☑ Yes ☐ NO (If "NO" - Explanation Required)
Mold / Cavity / Production Process

**DECLARATION**

I hereby affirm that the samples represented by this warrant are representative of our parts which were made by a process that meets all Production Part Approval Process Manual 4th Edition Requirements. I further affirm that these samples were produced at the production rate of 2000 / 24 hours. I also certify that documented evidence of such compliance is on file and available for review. I have noted any deviations from this declaration below.

EXPLANATION / COMMENTS: **e-f: Drawing correction after index "d" (see Report C008704_MIP_1 & 2 , no change in production)**

Is each Customer Tool properly tagged and numbered? ☐ Yes ☐ No ☑ n/a

Organization Authorized Signature: Camarda
Date: 03/07/2017
Print Name: Camarda Ettore
Phone No.: tel 390805858220
Fax No.:
Title: Area 1 Manager
E-mail: ettore.camarda@magna.com

FOR CUSTOMER USE ONLY (IF APPLICABLE)

Part Warrant Disposition: ☑ Approved ☐ Rejected ☐ Other
Customer Signature:
Date: 03.07.17
Print Name:
Customer Tracking Number (optional):

| Drawing 3693 update from index "d" to "f" |
|---|

Short description:

| | | | | |
|---|---|---|---|---|
| f | 1x | 003704_MP_2 | View X: 4.9±0.05 war/WAS 5.05±0.05 | 20170628 |
| e | 5x | 003704_MP_1 | View Main: (28.69±0.04) war/WAS (28.81±0.04); View X: (28.69±0.04) war/WAS (28.5±0.04); 5.05±0.05 war/WAS 4.9±0.05; TEXT: "warbearbeitet/PREMACHINED..." aktualisiert/UPDATED A/6: TEXT: "Wärmebehandlung.../HEAT TREATMENT..." aktualisiert/UPDATED | 20170322 |

Mistakes corrections on dwg after change of index "d"

| | PPAP Requirements | Required | Note | PPAP Docs updated |
|---|---|---|---|---|
| 1 | Design Records | Yes | | Yes |
| 2 | Authorized Engineering change documents | Yes | see T Report | Yes |
| 3 | Customer Engineering approval | n.a. | | |
| 4 | DFMEA | NO | | |
| 5 | Process flow diagram(s) | NO | | |
| 6 | PFMEA | NO | Errors on dwg | |
| 7 | Control plan | NO | Errors on dwg | |
| 8 | Measurement system analysis studies | NO | | |
| 9 | Dimensional results | NO | | |
| 10 | Records of Material / Performance test results | NO | | |
| 11 | Initial process studies | NO | | |
| 12 | Qualified laboratory documentation | NO | | |
| 13 | Appearance Approval Report (A.A.R.) | n.a. | | |
| 14 | Sample Production Parts | NO | | |
| 15 | Master sample | NO | | |
| 16 | Checking aids | n.a. | | |
| 17 | Customer-Specific Requirements | NO | | |
| 18 | Part Submission Warrant (PSW) | Yes | | Yes |

| | Other requirements | | | |
|---|---|---|---|---|
| 1 | PSW Raw part | NO | | |
| 2 | PSW E.P. part | NO | | |
| 3 | PSW Engagement Rings | NO | | |

GETRAG

# Part Submission Warrant

Part Name: Double Gear 2nd / Rev — Customer Part Number: 250.1.4298.00

Shown on Drawing No.: 250.1.4298.00 — Organization Part #:

Engineering Change Level: d C008704_MIP_1, e C008704_MIP_2 — Dated: 28-giu-17

Additional Engineering Changes: — Dated:

Safety and/or Government Regulation: ☐ Yes ☑ No — Purchase Order No.: — Weight (kg): 0.6050

Checking Aid No.: — Checking Aid Engineering Change Level: — Dated:

**ORGANIZATION MANUFACTURING INFORMATION**

GETRAG MODUGNO
Organization Name & Supplier/Vendor Code

VIA DEI CICLAMINI N°4
Street Address

MODUGNO BARI 70026 ITALY
City Region Postal Code Country

**CUSTOMER SUBMITTAL INFORMATION**

Customer Name/Division

Buyer/Buyer Code

DCT250
Application

**MATERIALS REPORTING**

Has customer-required Substances of Concern information been reported? ☐ Yes ☐ No ☑ n/a

Submitted by IMDS or other customer format:

Are polymeric parts identified with appropriate ISO marking codes? ☐ Yes ☐ No ☑ n/a

**REASON FOR SUBMISSION** (Check at least one)

- ☐ Initial Submission
- ☑ Engineering Change(s)
- ☐ Tooling: Transfer, Replacement, Refurbishment, or additional
- ☑ Correction of Discrepancy
- ☐ Tooling Inactive > than 1 year
- ☐ Change to Optional Construction or Material
- ☐ Supplier or Material Source Change
- ☐ Change in Part Processing
- ☐ Parts Produced at Additional Location
- ☐ Other - please specify below

**REQUESTED SUBMISSION LEVEL** (Check one)

- ☑ Level 1 - Warrant only (and for designated appearance items, an Appearance Approval Report) submitted to customer.
- ☐ Level 2 - Warrant with product samples and limited supporting data submitted to customer.
- ☐ Level 3 - Warrant with product samples and complete supporting data submitted to customer.
- ☐ Level 4 - Warrant and other requirements as defined by customer.
- ☐ Level 5 - Warrant with product samples and complete supporting data reviewed at organization's manufacturing location.

**SUBMISSION RESULTS**

The results for ☐ dimensional measurements ☐ material and functional tests ☐ appearance criteria ☐ statistical process package

These results meet all drawing and specification requirements: ☑ Yes ☐ NO (If "NO" - Explanation Required)

Mold / Cavity / Production Process

**DECLARATION**

I hereby affirm that the samples represented by this warrant are representative of our parts which were made by a process that meets all Production Part Approval Process Manual 4th Edition Requirements. I further affirm that these samples were produced at the production rate of 2000 / 24 hours. I also certify that documented evidence of such compliance is on file and available for review. I have noted any deviations from this declaration below.

EXPLANATION / COMMENTS: **d-e: Drawing correction after index "c" (see Report C008704_MIP_1 & 2 , no change in production)**

Is each Customer Tool properly tagged and numbered? ☐ Yes ☐ No ☑ n/a

Organization Authorized Signature: Camarda — Date: 03/07/2017

Print Name: Camarda Ettore — Phone No.: tel 390805858220 — Fax No.:

Title: Area 1 Manager — E-mail: ettore.camarda@magna.com

FOR CUSTOMER USE ONLY (IF APPLICABLE)

Part Warrant Disposition: ☑ Approved ☐ Rejected ☐ Other

Customer Signature: — Date: 03.07.17

Print Name: — Customer Tracking Number (optional):

| | | |
|---|---|---|
| Design Release: | 2017-06-28 | Alexander.Kwatschjow |
| Function Release: | 2017-06-28 | Alexander.Kwatschjow |
| Geardata Release: | 2017-06-28 | Alexander.Kwatschjow |
| Material Release: | 2017-06-28 | Alexander.Kwatschjow |
| SAP Release: | 2017-07-10 | Kristin.Schemionek |
| Document Status: | approved | |

fuer Freigabeinformation freiheltlich KEEP FREE FOR RELEASE INFORMATION

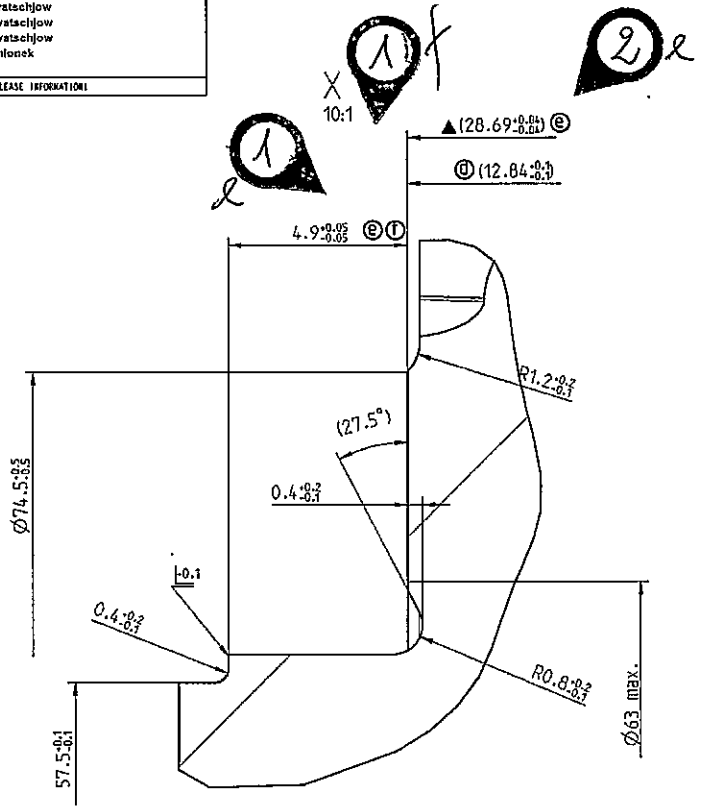


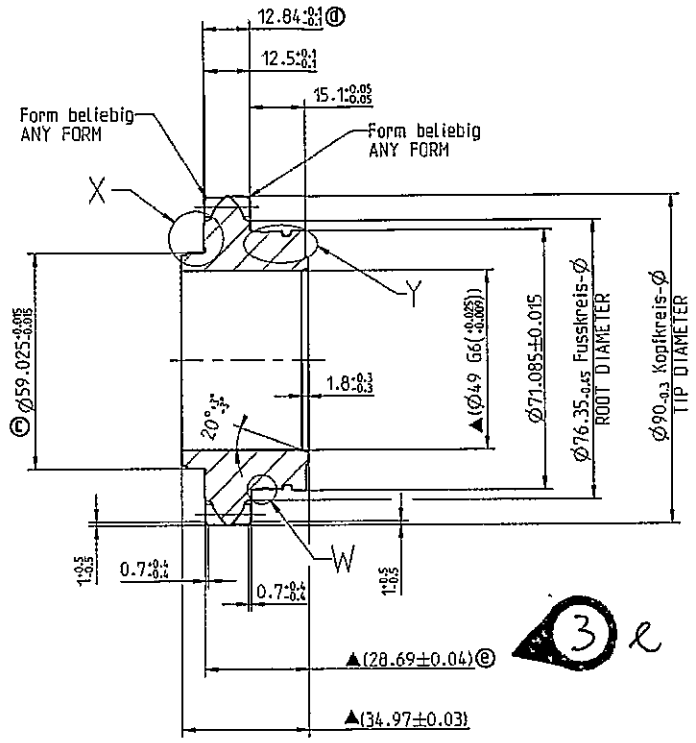


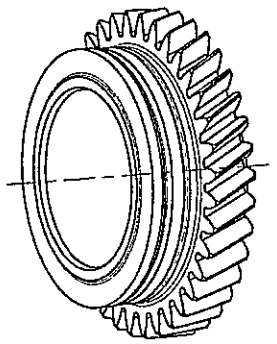

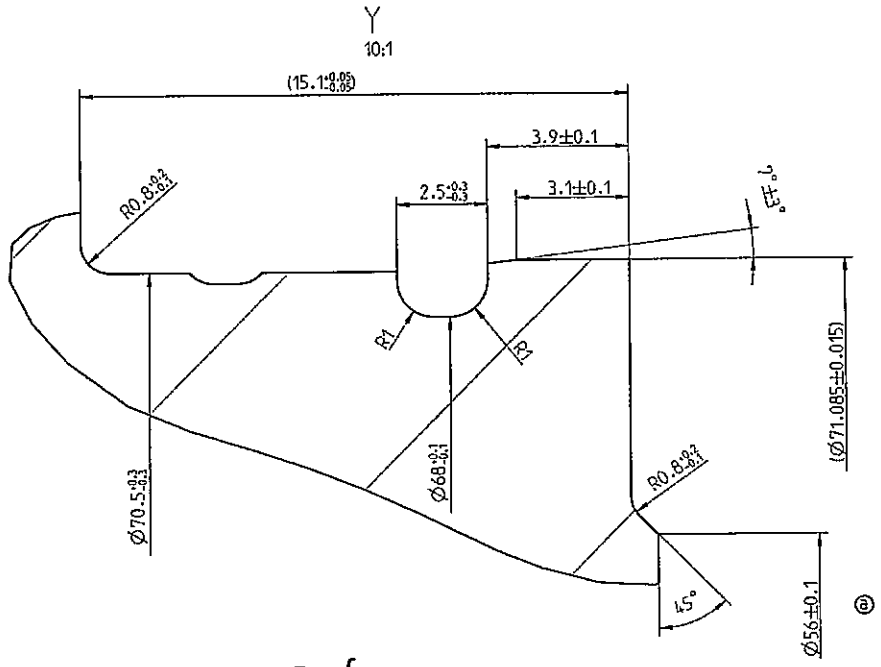


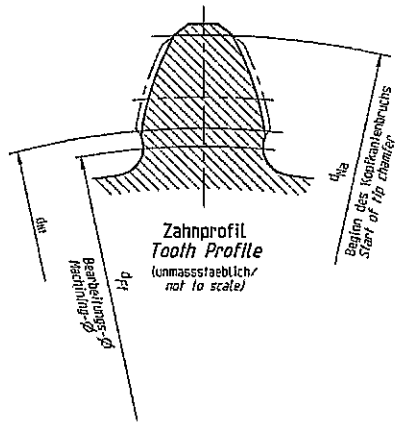


ⓓ W
Optionale Erkennungsrille/OPTIONAL ID GROOVE
10:1

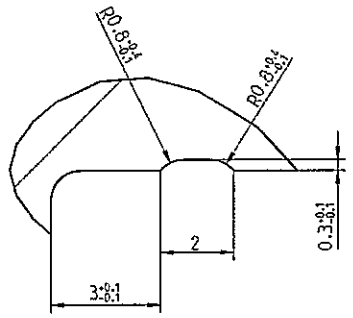


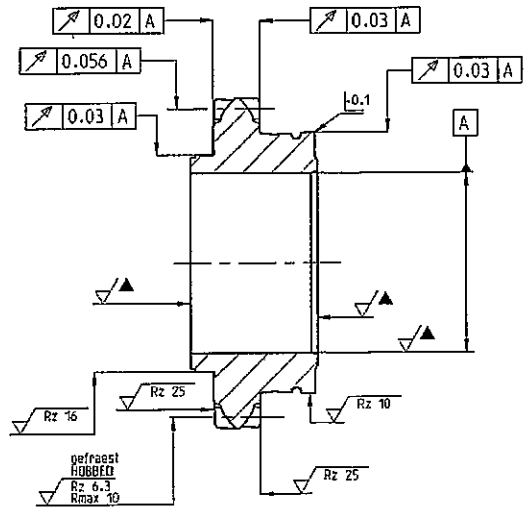


Kanten an Laufverzahnungen*Tooth chamfers*
unmassstaeblich*not to scale*

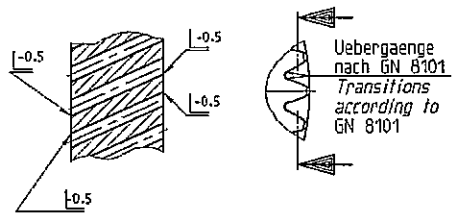


| | | |
|---|---|---|
| Aussenverzahnung / EXTERNAL GEAR | | |
| Zahnwelle/ SPLINE DATA EXTERNAL | | |
| Bezugsdurchmesser / REFERENCE DIAMETER $d_B$ | | |
| Module / NORMAL MODULE $m_n$ | | 2.05 |
| Zaehnezahl / NUMBER OF TEETH z | | 36 |
| Eingriffswinkel / NORMAL PRESSURE ANGLE $\alpha_n$ | | 17.5° |
| Schraegungswinkel / HELIX ANGLE $\beta$ | | 28.0° |
| Richtung / HAND OF HELIX | | LEFT. links |
| Bezugsprofil / BASIC RACK | | |
| Profilverschiebung/ADDENDUM MODIFICATION $x \cdot m_n$ | Nennmass / NOMINAL | -0.205 |
| Qualitaet / GEAR TOOTH QUALITY (DIN3961) | | 9 |
| Toleranzklasse / TOLERANCE CLASS | | |
| Zahndicke / TOOTH THICKNESS $s_n$ (Lehrenmass / GAGE DIMENSION) | effective max. | |
| Zahndicke / TOOTH THICKNESS $s_n$ (Einzelmessung / ACTUAL) | max. | 3.091 |
| | min. | 3.056 |
| Messkugel-Ø / BALL DIA $D_M$ | | 3.00 |
| Pruefmass / MEASUREMENT OVER BALLS $M_{dK}$ (Einzelmessung / ACTUAL) | max. | 85.916 |
| | min. | 85.796 |

MISTAKES CORRECTION AFTER CHANGE "d"
(SEE REPORT)
NO CHANGE IN PRODUCTION

Rz 40

ⓔ vorbearbeitet. Fertigmass▲ (...)
siehe 250.1.3692.76. 250.1.5221.75 und 250.1.8405.75
PREMACHINED. FINISHED DIMENSION▲ (...)
SEE 250.1.3692.76. 250.1.5221.75 AND 250.1.8405.75

Naehere Angaben zur Verzahnung
siehe Verzahnungsblatt gleicher Nummer
FURTHER GEAR DATA SEE
DATA SHEET SAME NUMBER

ⓔ Haerteangaben siehe Doppelrad 2./Rw. vst.
250.1.3692.76. 250.1.5221.75 und 250.1.8405.75
HEAT TREATMENT SEE DOUBLE GEAR 2ND/REV CPL.
250.1.3692.76. 250.1.5221.75 AND 250.1.8405.75

| | | | | | | | |
|---|---|---|---|---|---|---|---|
| | | | f | 1x | 08704_MIP_2 | View X: 4.9±0.05 war/WAS 5.05±0.05 | 20170628 |
| GC6/TS 803001 | 0 | <M> | e | 5x | 000704_MIP_ | View Main (28.69±0.04) war/WAS (28.84±0.04); View X: (28.69±0.04) war/WAS (28.84±0.04) 5.05±0.05 war/WAS 4.9±0.05. TEXT: "vorbearbeitet/PREMACHINED..." aktualisiert/UPDATED Aufg. TEXT: "Haerteangaben.../HEAT TREATMENT..." aktualisiert/UPDATED | 20170322 |
| | 0 | ▽ | | | | | |
| GN 3010 | 0 | <M> | d | 2x | 000045_MIP_ | View Main: 12.8±0.1 war/WAS 12.99±0.1, View X: (12.84±0.1) war/WAS (12.99±0.1) | 20160422 |
| | 0 | <C> | c | 1x | 000520_MIP_2 | View Main, 59.025±0.015 war/WAS 59.040±0.015, | 20160419 |
| | 0 | <A> | b | 1x | 000091_MIP_ | Ansicht W: Optionale Erkennungsrille hinzu/ VIEW W: OPTIONAL ID GROOVE ADDED | 20160415 |
| CAD Pro/Engineer | | | a | 1x | 35510 | Y: Ø56.8±0.2 entf./DEL. | 20120514 |
| | | | -- | -- | 35494_1 | Spezifikationsfreigegeb F wieder SPECIFICATION RELEASED LEVEL F APPROVED | 20110906 |

| | | | | |
|---|---|---|---|---|
| MASSSTAB / SCALE M: 1:1 (--) | Buchst. CHANGE INDEX | Anzahl NUMBER | Aend.-Nr. CHANGE REQUEST NO | Aenderung --nur mittels CAD zulaessig: ENEA uebernommen-- MODIFICATION --ONLY ALLOWED BY CAD. CHECK ENEA-- | Datum DATE |

Allgemeintoleranzen fuer Laengenmasse, Form und Lage ISO 2768 - mH gebrochene Kanten, Radien und Winkelmasse ISO 2768 - v
GENERAL TOLERANCES FOR LINEAR DIMENSIONS, FORM AND POSITION ISO 2768 - mH; CHAMFERS, RADII AND ANGULAR DIMENSIONS ISO 2768 - v

Informationen auf dieser Zeichnung sind ohne Angaben zur Verwendung und Freigabe unverbindlich.
INFORMATION ON THIS DRAWING PROVIDED WITHOUT OBLIGATION IF USAGE AND RELEASE ARE NOT SHOWN.

Auswertung der Durchmessermessung erfolgt nach der Gauss-Methode (Arithmetischer Mittelwert)
EVALUATION OF THE DIAMTER MEASUREMENT IS CARRIED OUT ACCORDING TO THE GAUSS METHOD (ARITHMETICAL MEAN VALUE)

| Form- und Lagetolerierung FORM AND POSITION TOLERANCES EN ISO 1101 | Tolerierung TOLERANCING ISO 8015 | Oberflaechenangaben SURFACE TEXTURE GN 4005 | Werkstuckkanten BREAK EDGES ISO 13715 |
|---|---|---|---|

Werkstoff / MATERIAL: GC6805000-02_20MnCrS5

Halbzeug SEMI-FINISHED: -

benetzte Oberflaeche OIL WETTED SURFACE: 0 cm²

Gesamtoberflaeche SURFACE AREA: 25442 mm²

Masse MASS: 0.630 kg

GETRAG
Getriebe- und Zahnradfabrik Hermann Hagenmeyer GmbH & Cie KG

Schutzvermerk nach ISO 16016 beachten PROTECTION PER ISO 16016

Benennung / ITEM NAME: DOUBLE GEAR 2ND / REV
Doppelrad 2./ Rw. Gg.

Artikel-Nr./ ITEM NO.: 2501369300
CAD-Modell: 2501369300

Blatt/SHEET 1 von/OF 1 | Reifegrad MATURITY: F | Format SIZE: A1

Ersatz fuer SUBSTITUTE FOR

| | | | |
|---|---|---|---|
| INITIAL NO. DATA | CHECKED BY Nr | | |
| Erstellt / DRWN: | Alexander.Kwatschjow | 28.06.2017 10:51:36 | 11 |
| MODEL: | Alexander.Kwatschjow | 28.06.2017 10:51:36 | 14 |

| | | |
|---|---|---|
| Design Release: | 2017-06-28 | Steffen.Horlacher |
| Function Release: | 2017-06-28 | Alexander.Kwatschjow |
| Geardata Release: | 2017-06-28 | Alexander.Kwatschjow |
| Material Release: | 2017-06-28 | Alexander.Kwatschjow |
| SAP Release: | 2017-07-10 | Kristin.Schemionek |
| Document Status: | approved | |

Fuer Freigabeinformation freihalten! KEEP FREE FOR RELEASE INFORMATION!

X
10:1

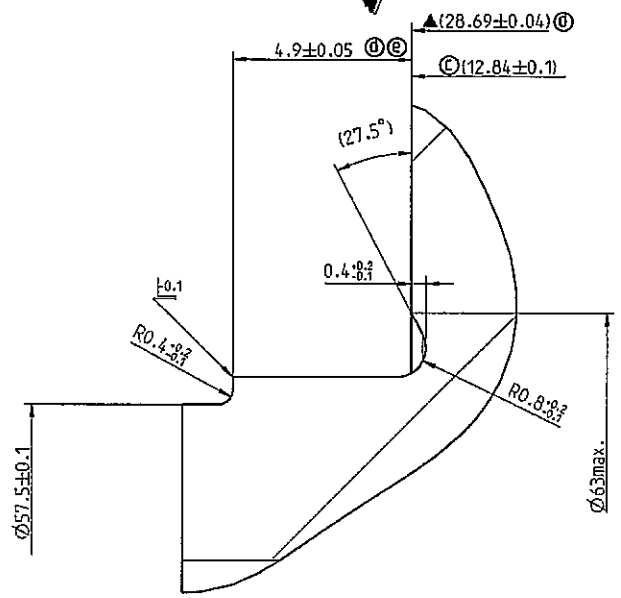


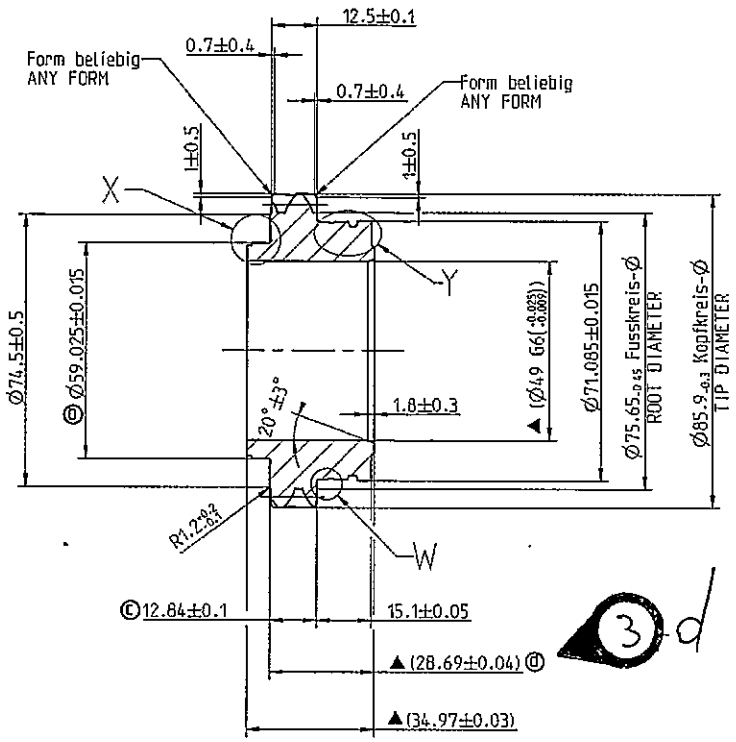


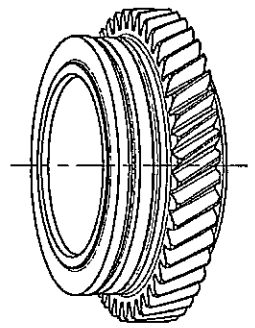

Y
10:1

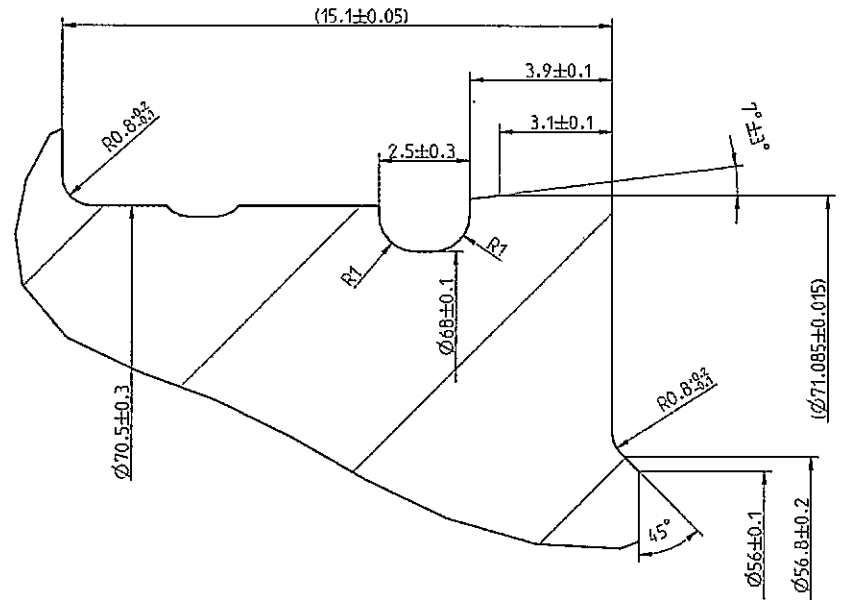


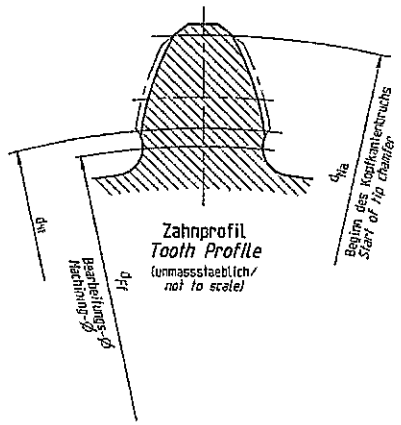


ⓐW
Optionale Erkennungsrille/OPTIONAL ID GROOVE
10:1

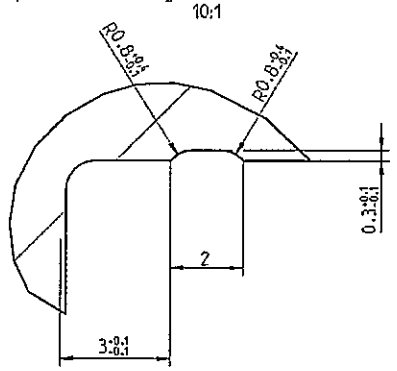


Kanten an Laufverzahnungen*Tooth chamfers*
unmassstaeblich*not to scale*

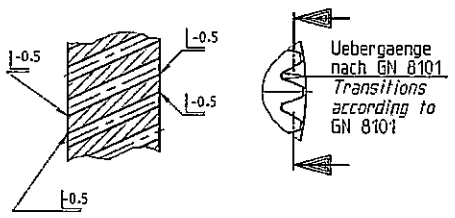


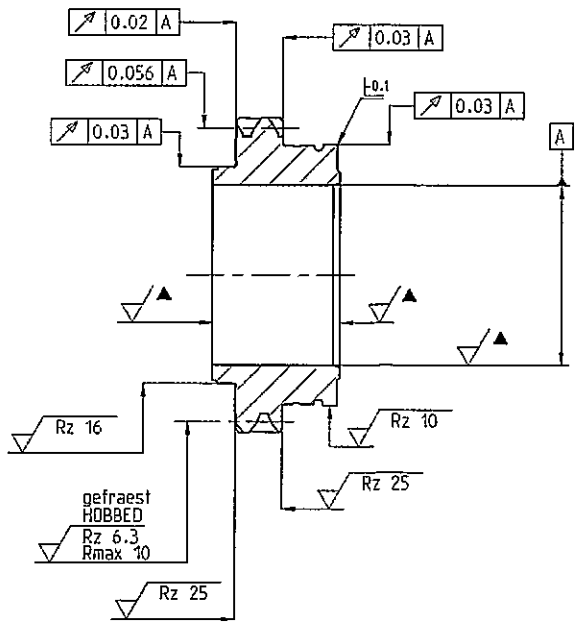


MISTAKES CORRECTION
AFTER CHANGE "C"
(SEE REPORT)
NO CHANGES IN PRODUCTION

Rz 40 (✓)

0.3 -0.1 (⊥)

vorbearbeitet. Fertigmass▲ (...)
siehe 250.1.4297.75 und 250.1.4297.77ⓓ
PREMACHINED. FINISHED DIMENSION▲ (...)
SEE 250.1.4297.75 AND 250.1.4297.77ⓓ

Naehere Angaben zur Verzahnung
siehe Verzahnungsblatt gleicher Nummer
FURTHER GEAR DATA SEE
DATA SHEET SAME NUMBER

Haerteangaben siehe
Doppelrad 2./Rw. vst.
250.1.4297.75 und 250.1.4297.77ⓓ
HEAT TREATMENT SEE
DOUBLE GEAR 2ND/REV CPL.
250.1.4297.75 AND 250.1.4297.77ⓓ

| | | | | | | | | |
|---|---|---|---|---|---|---|---|---|
| GCG 803001 | 0 | <M> | e | 1x | C006704_MIP_2 | View X: 4.9 ±0.05 war/WAS 5.05±0.05 | 20170628 |
| | 0 | <C> | | | | View Mass (28.69±0.04) war/WAS (28.84±0.04); View X: (28.69±0.04) war/WAS (28.84±0.04); 5.05±0.05 war/WAS 4.9±0.05 | |
| | 0 | <M> | d | 7x | C006704_MIP_1 | A/4 und D/4 250.4297.77 Mass/ADDED (Ma) | 20170322 |
| GN 3010 | 0 | <C> | c | 2x | C006045_MIP_1 | View Main: 12.84±0.1 war/WAS 12.99±0.1; View X: 112.84±0.1 war/WAS (12.99±0.1); | 20160422 |
| | 0 | <A> | b | 1x | C006520_MIP_2 | View Main: 59.025±0.015 war/WAS 59.040±0.015; | 20160419 |
| CAD Frei Freigabe! | | | a | 1x | C006991_MIP_1 | Ansicht W: Optionale Erkennungsrille hinzu/ VIEW W: OPTIONAL ID GROOVE ADDED | 20160413 |
| | | | – | – | 35494_1 | Spezifikationsreifegrad F erreicht / MATURITY LEVEL OF SPECIFICATION F APPROVED | 20110906 |

Massstab / SCALE: M: 1:1 (--)

Buchst. CHANGE INDEX | Anzahl NUMBER | Aend.-Nr. CHANGE REQUEST NO | Aenderung --nur mittels CAD zulaessig- FREA ueberpruefen-- MODIFICATION --ONLY ALLOWED BY CAD; CHECK FREA-- | Datum DATE

Allgemeintoleranzen fuer Laengenmasse, Form und Lage ISO 2768 - mH gebrochene Kanten, Radien und Winkelmasse ISO 2768 - v
GENERAL TOLERANCES FOR LINEAR DIMENSIONS, FORM AND POSITION ISO 2768 - mH; CHAMFERS, RADII AND ANGULAR DIMENSIONS ISO 2768 - v

Informationen auf dieser Zeichnung sind ohne Angaben zu Verwendung und Freigabe unverbindlich.
INFORMATION ON THIS DRAWING PROVIDED WITHOUT OBLIGATION IF USAGE AND RELEASE ARE NOT SHOWN.

Auswertung der Durchmessermessung erfolgt nach der Gauss-Methode (Arithmetischer Mittelwert)
EVALUATION OF THE DIAMTER MEASUREMENT IS CARRIED OUT ACCORDING TO THE GAUSS METHOD (ARITHMETICAL MEAN VALUE)

| Form- und Lagetolerierung FORMS AND POSITION TOLERANCES DIN ISO 1101 | Toleriertung TOLERANCING ISO 8015 | Oberflaechenangaben SURFACE TEXTURE DIN 4095 | Werkstueckkanten BREAK EDGES ISO 13715 |
|---|---|---|---|

Werkstoff / MATERIAL: GC6805000-02_20MnCrS5
Halbzeug / SEMI-FINISHED: -
Oelbenetzte Oberflaeche / OIL WETTED SURFACE: 0 cm2
Gesamtoberflaeche / SURFACE AREA: 24612 mm2
Masse / MASS: 0.605 kg

GETRAG
Getriebe- und Zahnradfabrik Hermann Hagenmeyer GmbH & Cie KG
Schutzvermerk nach ISO 16016 beachten
PROTECTION PER ISO 16016

Benennung / ITEM NAME: DOUBLE GEAR 2ND / REV
Doppelrad 2./ Rw. Gg.
Artikel-Nr./ ITEM ID.: 2501429800
CAD-Modell: 2501429800
Blatt/SHEET 1 von/OF 1 | Reifegrad MATURITY: F | Format SIZE: A1
Ersatz fuer / SUBSTITUTE FOR: -

| | DATUM/DATE | GEPRUEFT/CHECKED | GEAENDERT/REVISED | VERSION |
|---|---|---|---|---|
| Erstellt / Drawn: | 28 Jun 2017 | Steffen.Horlacher | 28 Jun 2017 | - |
| Model: | 28 Jun 2017 | Steffen.Horlacher | 28 Jun 2017 | - |

Document Revision: 20170628180252, printed on 2017-07-25 at 09:14 by Mirko.Viennil