3'3051

GETRAG

Part Submission Warrant

Part Name: Speed Gear Rev
Customer Part Number: 250.1.3649.04
Shown on Drawing No.: 250.1.3649.04
Organization Part #:
Engineering Change Level: b C000520_MIP_2
Dated: 19-apr-16
Additional Engineering Changes:
Dated:
Safety and/or Government Regulation: ☐ Yes ☑ No
Purchase Order No.:
Weight (kg): 0.7640
Checking Aid No.:
Checking Aid Engineering Change Level:
Dated:

ORGANIZATION MANUFACTURING INFORMATION

GETRAG MODUGNO
Organization Name & Supplier/Vendor Code

VIA DEI CICLAMINI N°4
Street Address

MODUGNO BARI 70026 ITALY
City Region Postal Code Country

CUSTOMER SUBMITTAL INFORMATION

Customer Name/Division

Buyer/Buyer Code

DCT250
Application

MATERIALS REPORTING

Has customer-required Substances of Concern information been reported? ☐ Yes ☐ No ☑ n/a
Submitted by IMDS or other customer format:

Are polymeric parts identified with appropriate ISO marking codes? ☐ Yes ☐ No ☑ n/a

REASON FOR SUBMISSION (Check at least one)

- ☐ Initial Submission
- ☑ Engineering Change(s)
- ☐ Tooling: Transfer, Replacement, Refurbishment, or additional
- ☐ Correction of Discrepancy
- ☐ Tooling Inactive > than 1 year
- ☐ Change to Optional Construction or Material
- ☐ Supplier or Material Source Change
- ☐ Change in Part Processing
- ☐ Parts Produced at Additional Location
- ☐ Other - please specify below

REQUESTED SUBMISSION LEVEL (Check one)

- ☐ Level 1 - Warrant only (and for designated appearance items, an Appearance Approval Report) submitted to customer.
- ☐ Level 2 - Warrant with product samples and limited supporting data submitted to customer.
- ☑ Level 3 - Warrant with product samples and complete supporting data submitted to customer.
- ☐ Level 4 - Warrant and other requirements as defined by customer.
- ☐ Level 5 - Warrant with product samples and complete supporting data reviewed at organization's manufacturing location.

SUBMISSION RESULTS

The results for ☐ dimensional measurements ☐ material and functional tests ☐ appearance criteria ☐ statistical process package
These results meet all drawing and specification requirements: ☑ Yes ☐ NO (If "NO" - Explanation Required)
Mold / Cavity / Production Process

DECLARATION

I hereby affirm that the samples represented by this warrant are representative of our parts which were made by a process that meets all Production Part Approval Process Manual 4th Edition Requirements. I further affirm that these samples were produced at the production rate of ____ / ____ hours. I also certify that documented evidence of such compliance is on file and available for review. I have noted any deviations from this declaration below.

EXPLANATION / COMMENTS: E.R. diameter change (harmonization between Getrag plants)

Is each Customer Tool properly tagged and numbered? ☐ Yes ☐ No ☑ n/a

Organization Authorized Signature: Camarda
Date: 12/05/2016
Print Name: Camarda Ettore
Phone No.: tel 390805858220
Fax No.:
Title: Area 1 Manager
E-mail: ettore.camarda@magna.com

FOR CUSTOMER USE ONLY (IF APPLICABLE)

Part Warrant Disposition: ☒ Approved ☐ Rejected ☐ Other
Customer Signature:
Date: 12.05.16
Print Name:
Customer Tracking Number (optional):

GETRAG Production Part Approval

DIMENSIONAL TEST RESULTS

Organization:	GETRAG	Part Number:	250.1.3649.04
Supplier/Vendor Code:	GETRAG Modugno	Part Name:	SGRv
INSPECTION FACILITY:		Design Record Change Level:	19/04/2016
NA		Engineering Change Documents:	b C000520_MIP_2

Organization Measurement Results (Data)

Item	Dimension/Specification	Specification / Limits		Test Date	Qty. Tested	1	2	3	4	5	controllo distruttivo	Ok	Not Ok
1	Diametro sede KK	74.065	75.035		5	74.036	74.047	74.051	74.044	74.055		ok	
2	Larghezza smusso	0.400	0.200		5	0.293	0.333	0.329	0.312	0.329		ok	
4	Angolo smusso	30.000	26.000		5	26.012	26.892	26.439	29.754	27.207		ok	

SIGNATURE	TITLE	DATE
G. Russo	QPE	12/05/2016

PROTOCOLLO DI MISURA ZEISS UMESS

SRRW

CICLO CNC

DISEGNO No.	MACCHINA DI MIS.	FORNITORE/CLIENTE	LAVORAZ.	OPERAZIONE
2501364904	PRISMO SACC	GETRAG	T. SOFT	

OPERATORE	DATA	NUMERO PART.	COD. MACCH.	EDIZ.DISEG.FIN.
	12. 5.2016	1		

IND	NOMI / IDF	SY	VAL ATT	VAL NOM	TOL.S	TOL.I	DEV	MAG
12. 5.2016 11 ora 05 min 22. 0sec								
300	CERCHIO I							
	DIAM.I.SUP	D	74.036	74.050	0.015	-0.015	-0.014	----

CNC - TERM.

PROTOCOLLO DI MISURA ZEISS UMESS

SRRW CICLO CNC

DISEGNO No.	MACCHINA DI MIS.	FORNITORE/CLIENTE	LAVORAZ.	OPERAZIONE
2501364904	PRISMO SACC	GETRAG	T. SOFT	

OPERATORE	DATA	NUMERO PART.	COD. MACCH.	EDIZ.DISEG.FIN.
	12. 5.2016	2		

IND	NOMI / IDF	SY	VAL ATT	VAL NOM	TOL.S	TOL.I	DEV	MAG
12. 5.2016 11 ora 08 min 48. 0sec								
300	CERCHIO I							
	DIAM.I.SUP	D	74.047	74.050	0.015	-0.015	-0.003	-

CNC - TERM.

PROTOCOLLO DI MISURA ZEISS UMESS

SRRW CICLO CNC

DISEGNO No.	MACCHINA DI MIS.	FORNITORE/CLIENTE	LAVORAZ.	OPERAZIONE
2501364904	PRISMO SACC	GETRAG	T. SOFT	

OPERATORE	DATA	NUMERO PART.	COD. MACCH.	EDIZ.DISEG.FIN.
	12. 5.2016	3		

IND	NOMI / IDF	SY	VAL ATT	VAL NOM	TOL.S	TOL.I	DEV	MAG
12. 5.2016 11 ora 15 min 32. 0sec								
300	CERCHIO I							
DIAM.I.SUP		D	74.051	74.050	0.015	-0.015	0.001	+

CNC - TERM.

PROTOCOLLO DI MISURA ZEISS UMESS

SRRW CICLO CNC

DISEGNO No.	MACCHINA DI MIS.	FORNITORE/CLIENTE	LAVORAZ.	OPERAZIONE
2501364904	PRISMO SACC	GETRAG	T. SOFT	

OPERATORE	DATA	NUMERO PART.	COD. MACCH.	EDIZ.DISEG.FIN.
	12. 5.2016	4		

IND	NOMI	/ IDF	SY	VAL ATT	VAL NOM	TOL.S	TOL.I	DEV	MAG
12. 5.2016 11ora 25 min 24. 0sec									
300		CERCHIO I							
	DIAM.I.SUP		D	74.044	74.050	0.015	-0.015	-0.006	--

CNC - TERM.

PROTOCOLLO DI MISURA ZEISS UMESS

SRRW CICLO CNC

DISEGNO No.	MACCHINA DI MIS.	FORNITORE/CLIENTE	LAVORAZ.	OPERAZIONE
2501364904	PRISMO SACC	GETRAG	T. SOFT	

OPERATORE	DATA	NUMERO PART.	COD. MACCH.	EDIZ.DISEG.FIN.
	12. 5.2016	5		

IND	NOMI	/ IDF	SY	VAL ATT	VAL NOM	TOL.S	TOL.I	DEV	MAG
12. 5.2016 11 ora 35 min 31. 0sec									
300		CERCHIO I							
	DIAM.I.SUP		D	74.055	74.050	0.015	-0.015	0.005	++

CNC - TERM.

GETRAG

Via dei Ciclamini 4, Modugno (BA)

Oggetto:	SRRW
Numero:	3649 PZ N.1
Operatore:	TURNO D
Data, ora:	12.05.2016, 15:01
Nota:	PART X
Tastatore:	PCV 350 / 33 mm
Macchina:	MOA 416120 002

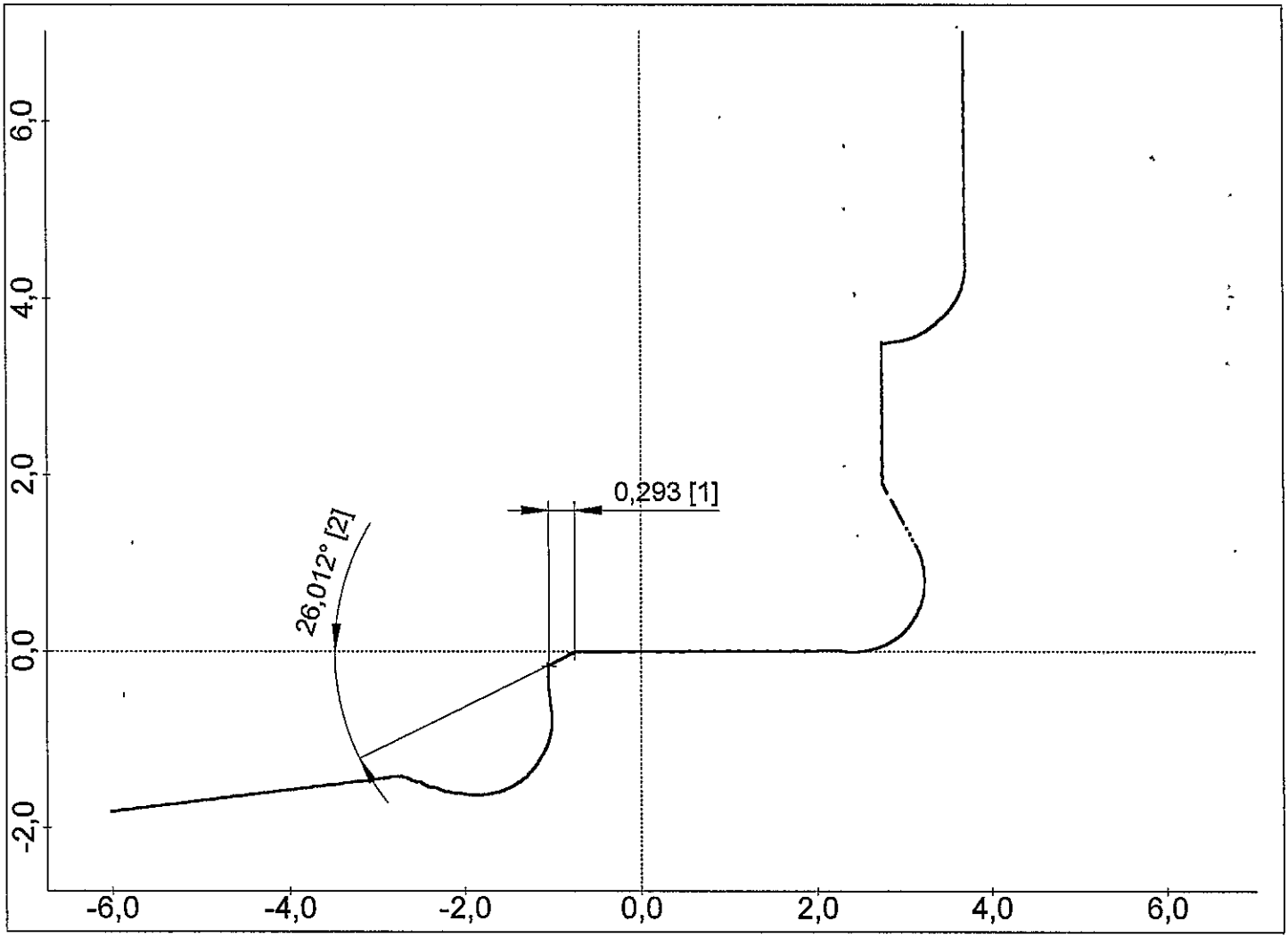

PERTHOMETER CONCEPT

Area Riservata alla Produzione

Valutazione Profilo

OK ☐

NOK ☐

N°BADGE ODP RICEVENTE

GETRAG

Via dei Ciclamini 4, Modugno (BA)

Oggetto:	SRRW
Numero:	3649 PZ N.2
Operatore:	TURNO D
Data, ora:	12.05.2016, 15:01
Nota:	PART X
Tastatore:	PCV 350 / 33 mm
Macchina:	MOA 416120 002

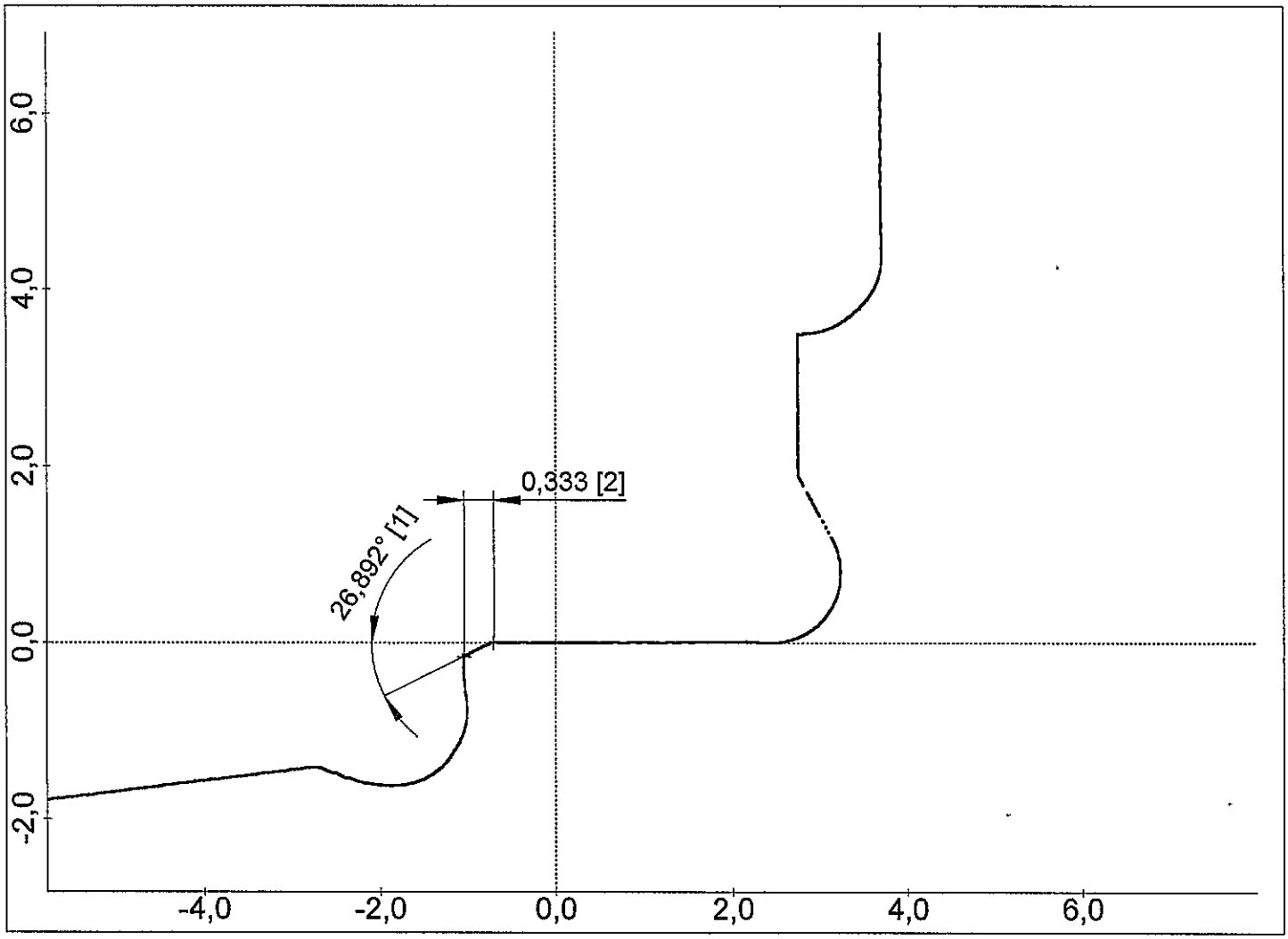

PERTHOMETER CONCEPT

Area Riservata alla Produzione

Valutazione Profilo

OK ☐

NOK ☐

N°BADGE ODP RICEVENTE

GETRAG

Via dei Ciclamini 4, Modugno (BA)

Oggetto:	SRRW
Numero:	3649 PZ N.3
Operatore:	TURNO D
Data, ora:	12.05.2016, 15:01
Nota:	PART X
Tastatore:	PCV 350 / 33 mm
Macchina:	MOA 416120 002

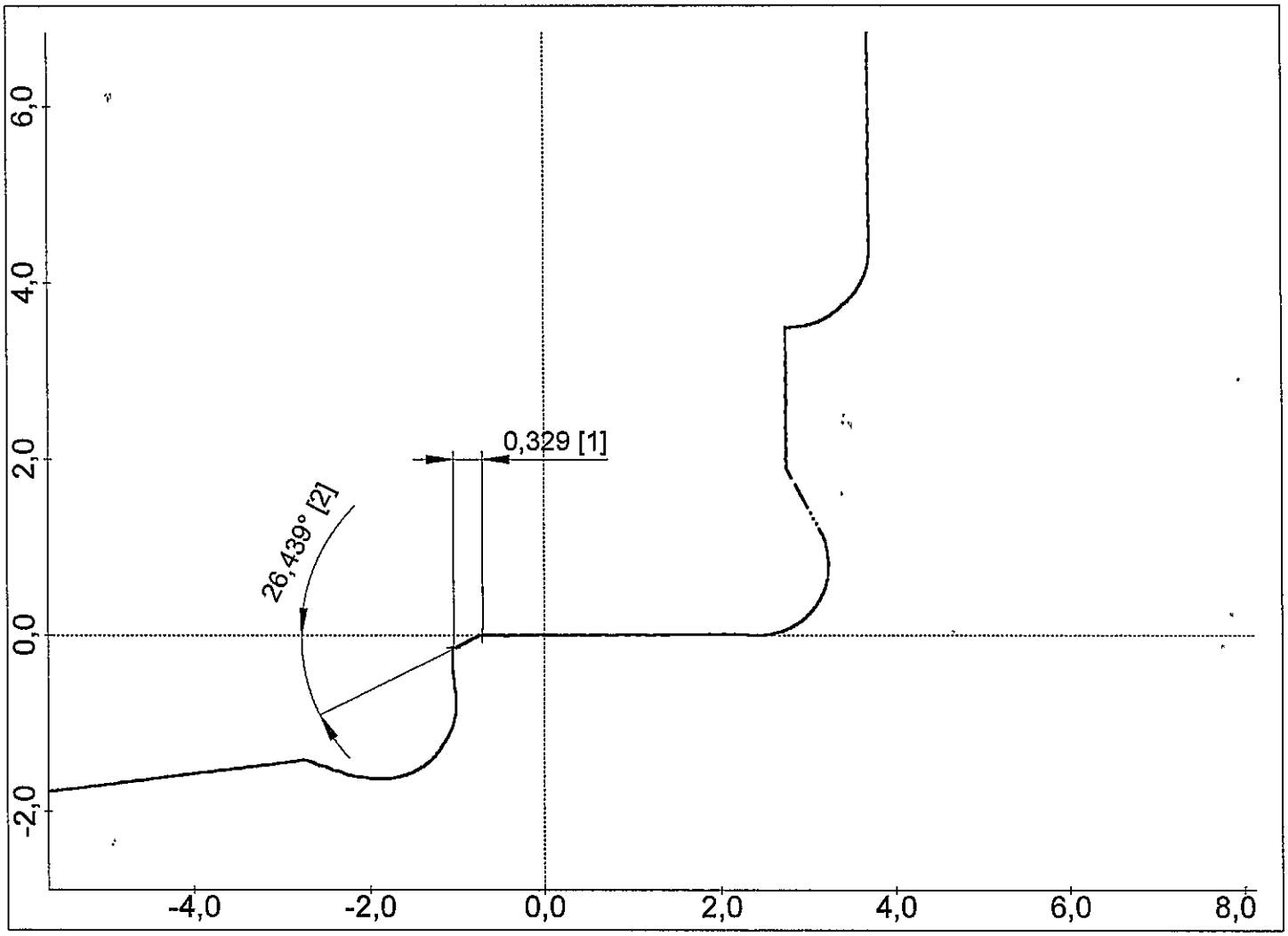

PERTHOMETER CONCEPT

Area Riservata alla Produzione

Valutazione Profilo

OK ☐

NOK ☐

N°BADGE ODP RICEVENTE

GETRAG

Via dei Ciclamini 4, Modugno (BA)

Oggetto:	SRRW
Numero:	3649 PZ N.4
Operatore:	TURNO D
Data, ora:	12.05.2016, 15:01
Nota:	PART X
Tastatore:	PCV 350 / 33 mm
Macchina:	MOA 416120 002

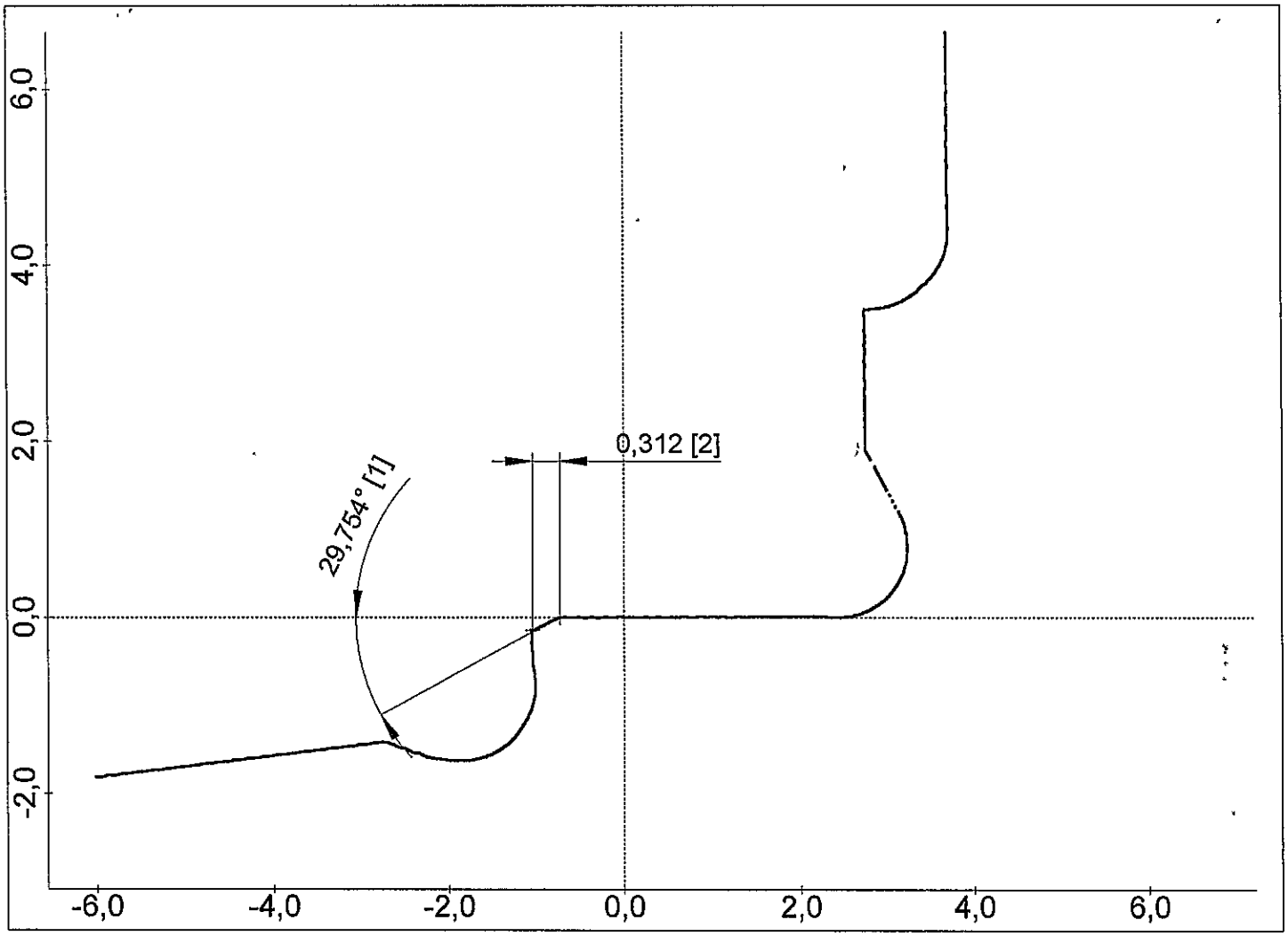

PERTHOMETER CONCEPT

Area Riservata alla Produzione

Valutazione Profilo

OK ☐

NOK ☐

N°BADGE ODP RICEVENTE

GETRAG

Via dei Ciclamini 4, Modugno (BA)

Oggetto:	SRRW
Numero:	3649 PZ N.5
Operatore:	TURNO D
Data, ora:	12.05.2016, 15:01
Nota:	PART X
Tastatore:	PCV 350 / 33 mm
Macchina:	MOA 416120 002

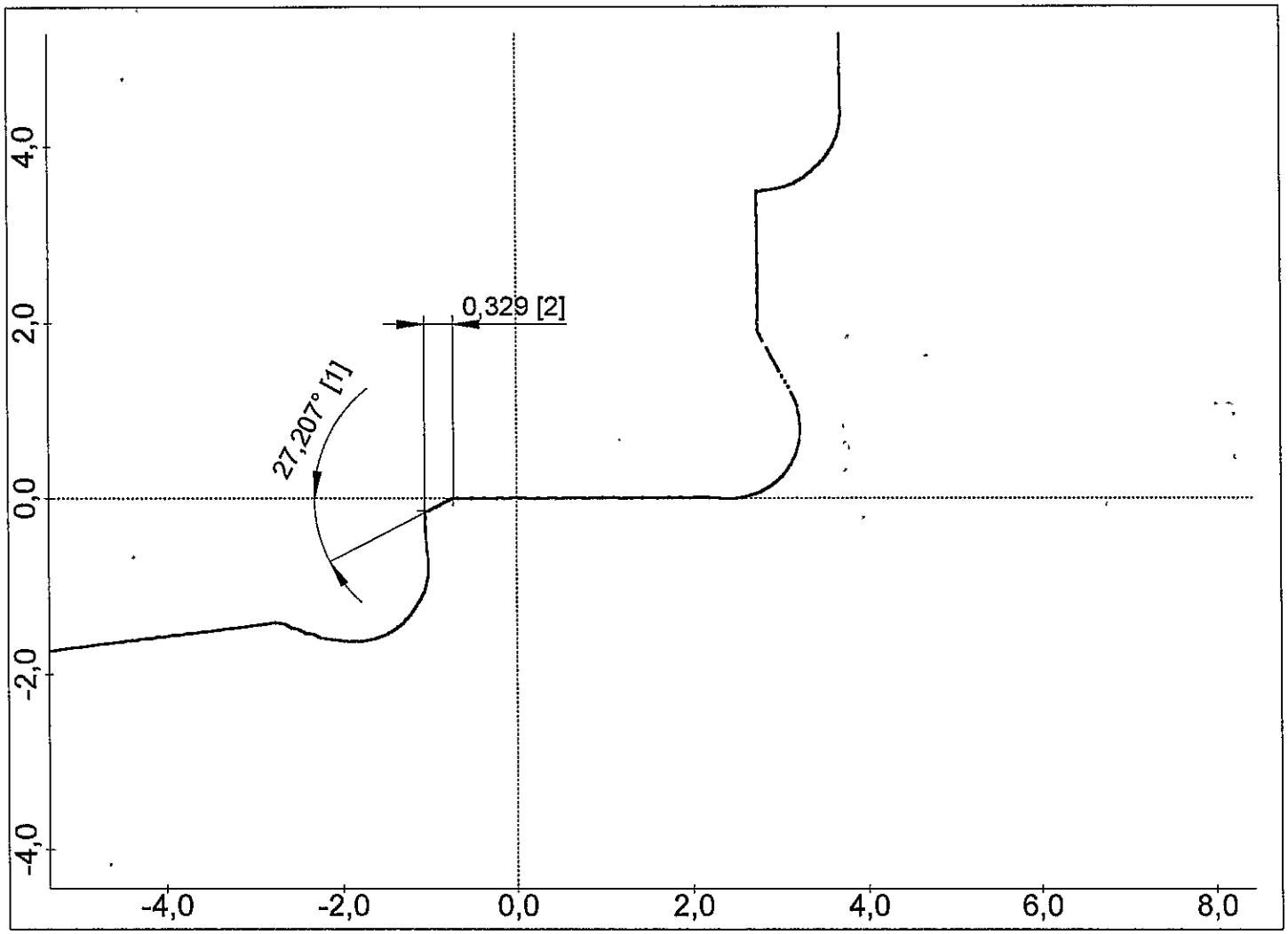

PERTHOMETER CONCEPT

Area Riservata alla Produzione

Valutazione Profilo

OK ☐

NOK ☐

N°BADGE ODP RICEVENTE

Drawing 3649.04 update from index "a" to "b"					
Short description:	b	4x	:000520_HIP_2	View X: 74.05±0.015 war/WAS 74.065±0.015; 0.3±0.1 und/AND 20°±2° hinzu/ADDED; Kantenbruch/CHAMFER -0.1 entfernt/DELETED	20160419

	PPAP Requirements	Required	Note	PPAP Docs updated
1	Design Records	Yes		Yes
2	Authorized Engineering change documents	Yes	see dwg	Yes
3	Customer Engineering approval	n.a.		
4	DFMEA	NO		
5	Process flow diagram(s)	NO		
6	PFMEA	Yes		Yes
7	Control plan	Yes		Yes
8	Measurement system analysis studies	NO		
9	Dimensional results	Yes		Yes
10	Records of Material / Performance test results	NO		
11	Initial process studies	NO		
12	Qualified laboratory documentation	NO		
13	Appearance Approval Report (A.A.R.)	n.a.		
14	Sample Production Parts	Yes		Yes
15	Master sample	Yes		Yes
16	Checking aids	n.a.		
17	Customer-Specific Requirements	NO		
18	Part Submission Warrant (PSW)	Yes		Yes

	Other requirements			
1	PSW Raw part	NO		
2	PSW E.P. part	NO		
3	PSW Engagement Rings	NO		

GETRAG

Part Submission Warrant

Part Name: Speed Gear Rev
Customer Part Number: 250.1.3649.05
Shown on Drawing No.: 250.1.3649.05
Organization Part #:
Engineering Change Level: b C000520_MIP_2
Dated: 19-apr-16
Additional Engineering Changes:
Dated:
Safety and/or Government Regulation: ☐ Yes ☑ No
Purchase Order No.:
Weight (kg): 0.7640
Checking Aid No.:
Checking Aid Engineering Change Level:
Dated:

ORGANIZATION MANUFACTURING INFORMATION

GETRAG MODUGNO
Organization Name & Supplier/Vendor Code

VIA DEI CICLAMINI N°4
Street Address

MODUGNO | BARI | 70026 | ITALY
City | Region | Postal Code | Country

CUSTOMER SUBMITTAL INFORMATION

Customer Name/Division

Buyer/Buyer Code

DCT250
Application

MATERIALS REPORTING

Has customer-required Substances of Concern information been reported? ☐ Yes ☐ No ☑ n/a
Submitted by IMDS or other customer format:

Are polymeric parts identified with appropriate ISO marking codes? ☐ Yes ☐ No ☑ n/a

REASON FOR SUBMISSION (Check at least one)

- ☐ Initial Submission
- ☑ Engineering Change(s)
- ☐ Tooling: Transfer, Replacement, Refurbishment, or additional
- ☐ Correction of Discrepancy
- ☐ Tooling Inactive > than 1 year
- ☐ Change to Optional Construction or Material
- ☐ Supplier or Material Source Change
- ☐ Change in Part Processing
- ☐ Parts Produced at Additional Location
- ☐ Other - please specify below

REQUESTED SUBMISSION LEVEL (Check one)

- ☐ Level 1 - Warrant only (and for designated appearance items, an Appearance Approval Report) submitted to customer.
- ☐ Level 2 - Warrant with product samples and limited supporting data submitted to customer.
- ☑ Level 3 - Warrant with product samples and complete supporting data submitted to customer.
- ☐ Level 4 - Warrant and other requirements as defined by customer.
- ☐ Level 5 - Warrant with product samples and complete supporting data reviewed at organization's manufacturing location.

SUBMISSION RESULTS

The results for ☐ dimensional measurements ☐ material and functional tests ☐ appearance criteria ☐ statistical process package
These results meet all drawing and specification requirements: ☑ Yes ☐ NO (If "NO" - Explanation Required)
Mold / Cavity / Production Process

DECLARATION

I hereby affirm that the samples represented by this warrant are representative of our parts which were made by a process that meets all Production Part Approval Process Manual 4th Edition Requirements. I further affirm that these samples were produced at the production rate of ____ / ____ hours. I also certify that documented evidence of such compliance is on file and available for review. I have noted any deviations from this declaration below.

EXPLANATION / COMMENTS: **E.R. diameter change (harmonization between Getrag plants)**

Is each Customer Tool properly tagged and numbered? ☐ Yes ☐ No ☑ n/a

Organization Authorized Signature
Date: 12/05/2016
Print Name: Camarda Ettore
Phone No.: tel 390805858220
Fax No.:
Title: Area 1 Manager
E-mail: ettore.camarda@magna.com

FOR CUSTOMER USE ONLY (IF APPLICABLE)

Part Warrant Disposition: ☒ Approved ☐ Rejected ☐ Other

Customer Signature
Date: 12.05.16
Print Name
Customer Tracking Number (optional)

GETRAG

Part Submission Warrant

Part Name: Speed Gear Rev
Customer Part Number: 250.1.4229.04
Shown on Drawing No.: 250.1.4229.04
Organization Part #:
Engineering Change Level: a C000520_MIP_2
Dated: 19-apr-16
Additional Engineering Changes:
Dated:
Safety and/or Government Regulation: ☐ Yes ☑ No
Purchase Order No.:
Weight (kg): 0.7940
Checking Aid No.:
Checking Aid Engineering Change Level:
Dated:

ORGANIZATION MANUFACTURING INFORMATION

GETRAG MODUGNO
Organization Name & Supplier/Vendor Code

VIA DEI CICLAMINI N°4
Street Address

MODUGNO BARI 70026 ITALY
City Region Postal Code Country

CUSTOMER SUBMITTAL INFORMATION

Customer Name/Division

Buyer/Buyer Code

DCT250
Application

MATERIALS REPORTING

Has customer-required Substances of Concern information been reported? ☐ Yes ☐ No ☑ n/a

Submitted by IMDS or other customer format:

Are polymeric parts identified with appropriate ISO marking codes? ☐ Yes ☐ No ☑ n/a

REASON FOR SUBMISSION (Check at least one)

- ☐ Initial Submission
- ☑ Engineering Change(s)
- ☐ Tooling: Transfer, Replacement, Refurbishment, or additional
- ☐ Correction of Discrepancy
- ☐ Tooling Inactive > than 1 year
- ☐ Change to Optional Construction or Material
- ☐ Supplier or Material Source Change
- ☐ Change in Part Processing
- ☐ Parts Produced at Additional Location
- ☐ Other - please specify below

REQUESTED SUBMISSION LEVEL (Check one)

- ☐ Level 1 - Warrant only (and for designated appearance items, an Appearance Approval Report) submitted to customer.
- ☐ Level 2 - Warrant with product samples and limited supporting data submitted to customer.
- ☑ Level 3 - Warrant with product samples and complete supporting data submitted to customer.
- ☐ Level 4 - Warrant and other requirements as defined by customer.
- ☐ Level 5 - Warrant with product samples and complete supporting data reviewed at organization's manufacturing location.

SUBMISSION RESULTS

The results for ☐ dimensional measurements ☐ material and functional tests ☐ appearance criteria ☐ statistical process package

These results meet all drawing and specification requirements: ☑ Yes ☐ NO (If "NO" - Explanation Required)

Mold / Cavity / Production Process

DECLARATION

I hereby affirm that the samples represented by this warrant are representative of our parts which were made by a process that meets all Production Part Approval Process Manual 4th Edition Requirements. I further affirm that these samples were produced at the production rate of ____ / ____ hours. I also certify that documented evidence of such compliance is on file and available for review. I have noted any deviations from this declaration below.

EXPLANATION / COMMENTS: E.R. diameter change (harmonization between Getrag plants)

Is each Customer Tool properly tagged and numbered? ☐ Yes ☐ No ☑ n/a

Organization Authorized Signature: Camarda

Date: 12/05/2016

Print Name: Camarda Ettore
Phone No.: tel 390805858220
Fax No.:
Title: Area 1 Manager
E-mail: ettore.camarda@magna.com

FOR CUSTOMER USE ONLY (IF APPLICABLE)

Part Warrant Disposition: ☑ Approved ☐ Rejected ☐ Other

Customer Signature:
Date: 12.05.16
Print Name:
Customer Tracking Number (optional):

Design Release:	2016-04-27	Agapi.Raidt
Function Release:	2016-05-17	Michael Glerlatta
Geardata Release:	2014-05-08	I.A. Fabrizio.Cricenti
Material Release:	not required	
SAP Release:	2016-05-19	Hartmut.Kobald
Document Status:	approved	

Fuer Freigabeinformation freihalten! KEEP FREE FOR RELEASE INFORMATION!

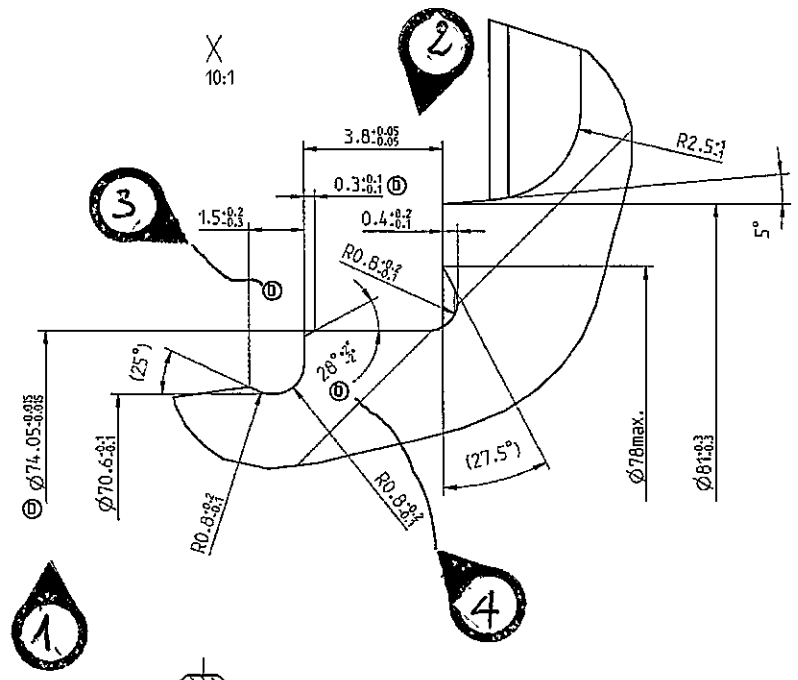

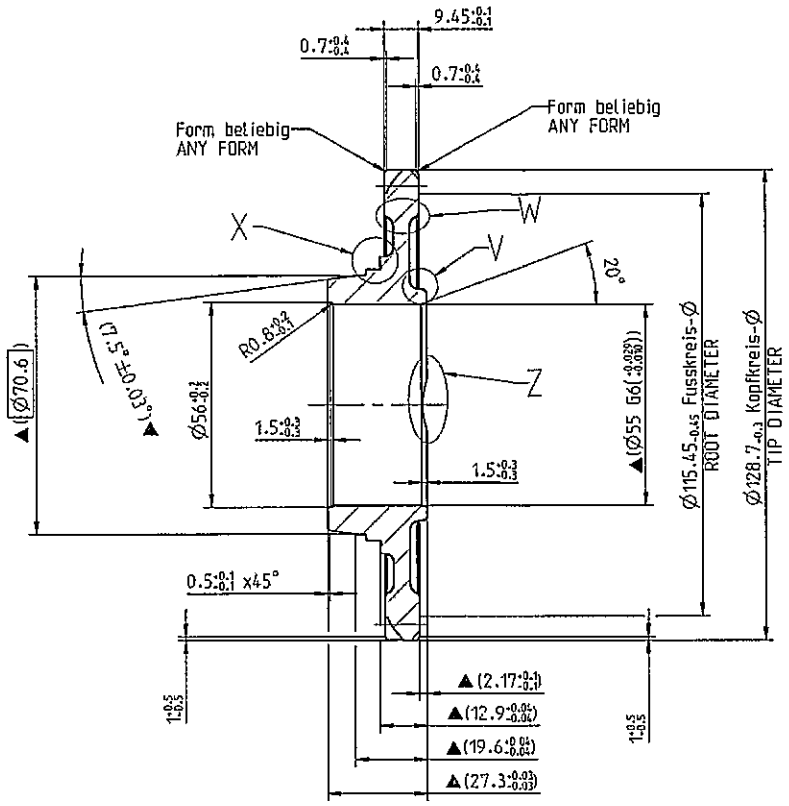

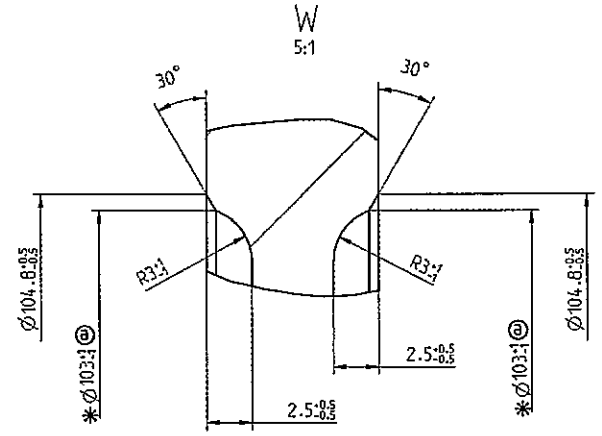

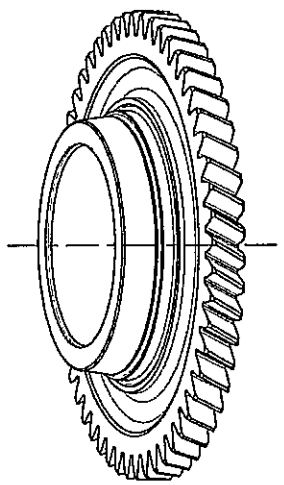

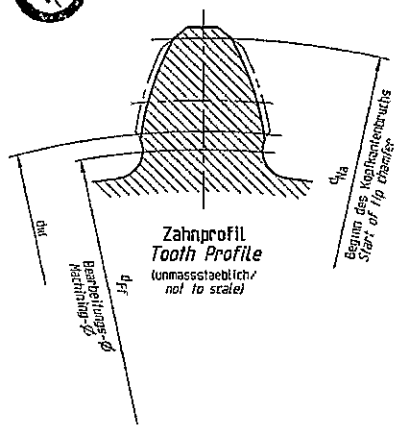

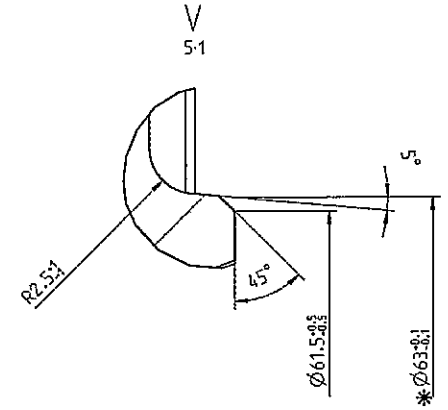

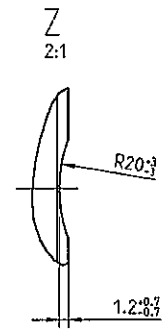

vorbearbeitet, Fertigmass▲ (...)
siehe 250.1.3648.05
PREMACHINED, FINISHED DIMENSION▲ (...)
SEE 250.1.3648.05

Naehere Angaben zur Verzahnung
siehe Verzahnungsblatt gleicher Nummer
FURTHER GEAR DATA SEE
DATA SHEET SAME NUMBER

Kanten an Laufverzahnungen \ *Tooth chamfers*
unmassstaeblich \ *not to scale*

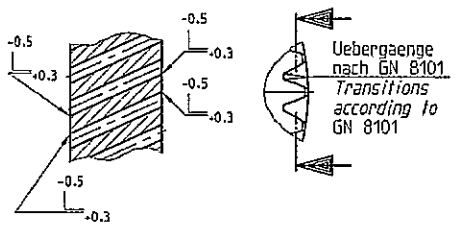

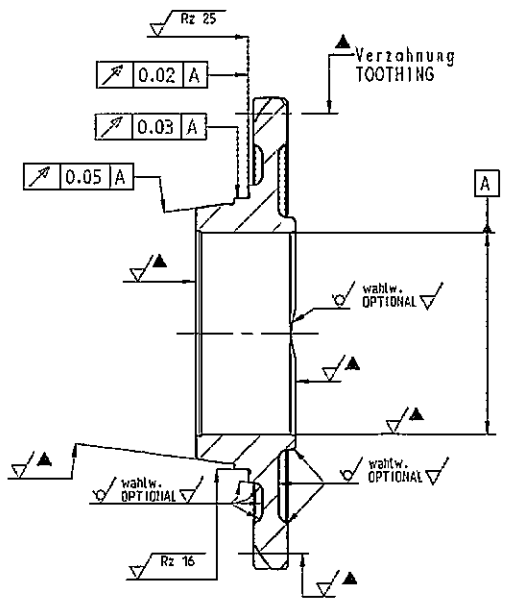

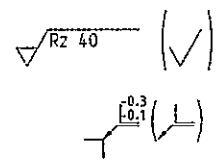

Aussenverzahnung / EXTERNAL GEAR	
Zahnwelle/ SPLINE DATA EXTERNAL	
Bezugsdurchmesser / REFERENCE DIAMETER d_B	
Modul / NORMAL MODULE m_n	2.05
Zaehnezahl / NUMBER OF TEETH z	52
Eingriffswinkel / NORMAL PRESSURE ANGLE α_n	17.5°
Schraegungswinkel / HELIX ANGLE β	28.0°
Richtung / HAND OF HELIX	RIGHT, rechts
Bezugsprofil / BASIC RACK	
Profilverschiebung/ADDENDUM MODIFICATION $x=n_n$ — Nennmass / NOMINAL	1.202
Qualitaet / GEAR TOOTH QUALITY (DIN3962)	9
Toleranzklasse / TOLERANCE CLASS	
Zahndicke / TOOTH THICKNESS s_n (Lehrenmass / GAGE DIMENSION) — effective max.	
Zahndicke / TOOTH THICKNESS s_n (Einzelmessung) / ACTUAL) — max.	3.900
— min.	3.865
Messkugel-Ø / BALL DIA D_M	3.0
Pruefmass / MEASUREMENT OVER BALLS M_{dK} (Einzelmessung / ACTUAL) — max.	125.549
— min.	125.449

✱ Rohteilgeometrie
RAW PART GEOMETRY

Haerteangaben siehe
Schaltrad Rw.Gg. vst. 250.1.3648.05
HEAT TREATMENT SEE
SPEED GEAR REV. CPL. 250.1.3648.05

GCG B03001	0	<M>					
	0	<C>					
	0	<M>					
GN 3010	0	<C>					
	0	<A>	b	4x	00520.KIP.2	View X: 74.05±0.015 war/WAS 74.065±0.015; 0.3±0.1 und/AND 25°±2° hinzu/ADDED, Kanteninbruch/CHAMFER ~0.1 entfernt/DELETED	20160419
CAD Frei Freigeben			a	2x	35670	View W: Ø103±1 war/WAS Ø103±0.1 (2x)	20160812
			---	---	35934	Spezifikationsreifegrad F erreicht / MATURITY LEVEL OF SPECIFICATION F APPROVED	20140404

Hassstab / SCALE M: 1:1 (--)

Buchst. CHANGE LETTER | Anzahl NUMBER | Aend.-Index CHANGE INDEX | Aenderung MODIFICATION | Datum DATE

--nur mittels CAD zulaessig FREA ueberpruefen--
--ONLY ALLOWED BY CAD; CHECK FREA--

Allgemeintoleranzen fuer Langenmasse, Form und Lage ISO 2768 - mk gebrochene Kanten, Radien und Winkelmasse ISO 2768 - v
GENERAL TOLERANCES FOR LINEAR DIMENSIONS, FORM AND POSITION ISO 2768 - mK CHAMFERS, RADII AND ANGULAR DIMENSIONS ISO 2768 - v

Informationen auf dieser Zeichnung sind ohne Angaben zu Verwendung und Freigabe unverbindlich.
INFORMATION ON THIS DRAWING PROVIDED WITHOUT OBLIGATION IF USAGE AND RELEASE ARE NOT SHOWN.

Auswertung der Durchmessermessung erfolgt nach der Gauss-Methode (Arithmetischer Mittelwert)
EVALUATION OF THE DIAMETER MEASUREMENT IS CARRIED OUT ACCORDING TO THE GAUSS METHOD (ARITHMETICAL MEAN VALUE)

Form- und Lagetolerierung FORM AND POSITION TOLERANCES EN ISO 1101 | Tolerierung TOLERANCING ISO 8015 | Oberflaechenangaben SURFACE TEXTURE GN 4005 | Werkstueckkanten BREAK EDGES ISO 13715

Werkstoff / MATERIAL: GCG_B05000_02_20MnCrS5
Halbzeug SEMI-FINISHED: –
ueberhaelzte Oberflaeche OIL WETTED SURFACE: 0 mm²
Gesamtoberflaeche SURFACE AREA: 36597 mm²
Masse MASS: 0.764 kg

GETRAG
Getriebe- und Zahnradfabrik Hermann Hagenmeyer GmbH & Cie KG

Benennung / ITEM NAME: SPEED GEAR REV.
Schaltrad Rw. Gang

Artikel-Nr./ ITEM NO.: 2501364904
CAD-Modell: 2501364904

Blatt/SHEET 1 von/OF 1 | Reifegrad MATURITY: F | Format SIZE: A1

Schutzvermerk nach ISO 16016 beachten
PROTECTION PER ISO 16016

Ersatz fuer SUBSTITUTE FOR

INTRANTIN DATA	CREATED IN BF	CHECKED IN DK-DATEN/PDM	PDM-SYS VERSION
Zeichn / DRW:	Agapi.Raidt	22.04.2016 12:16:53	3
MODEL:	Agapi Raidt	27.04.2016 12:42:51	1.04

Design Release:	2016-05-27	Agapi.Raidt
Function Release:	2016-05-17	Michael.Gierlatta
Geardata Release:	2014-05-08	I.A. Fabrizio Cricenti
Material Release:	not required	
SAP Release:	2016-05-19	Hartmut.Kobald
Document Status:	approved	

Fuer Freigabeinformation Freihaltefeld KEEP FREE FOR RELEASE INFORMATION!

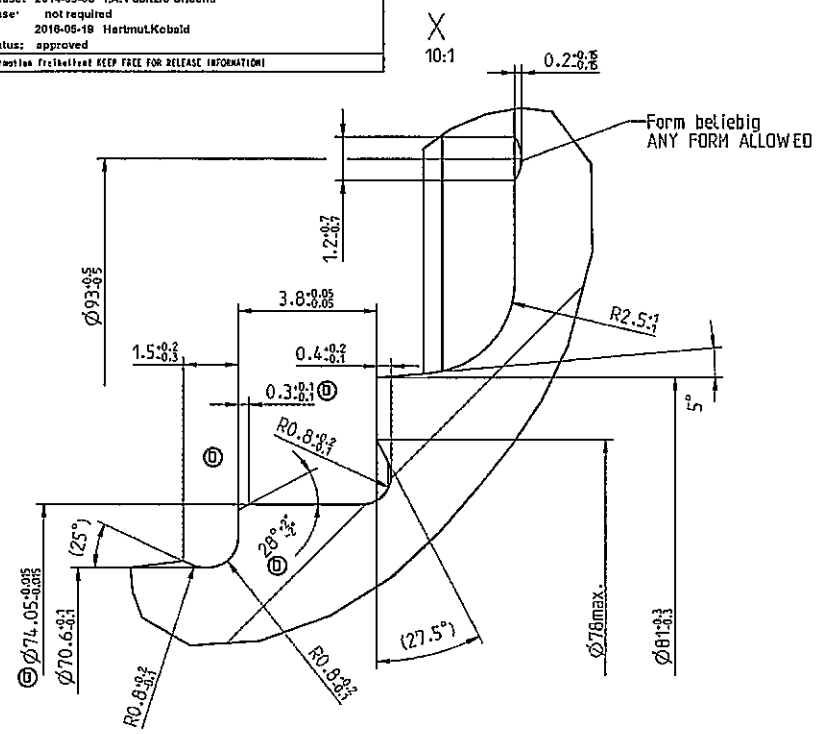

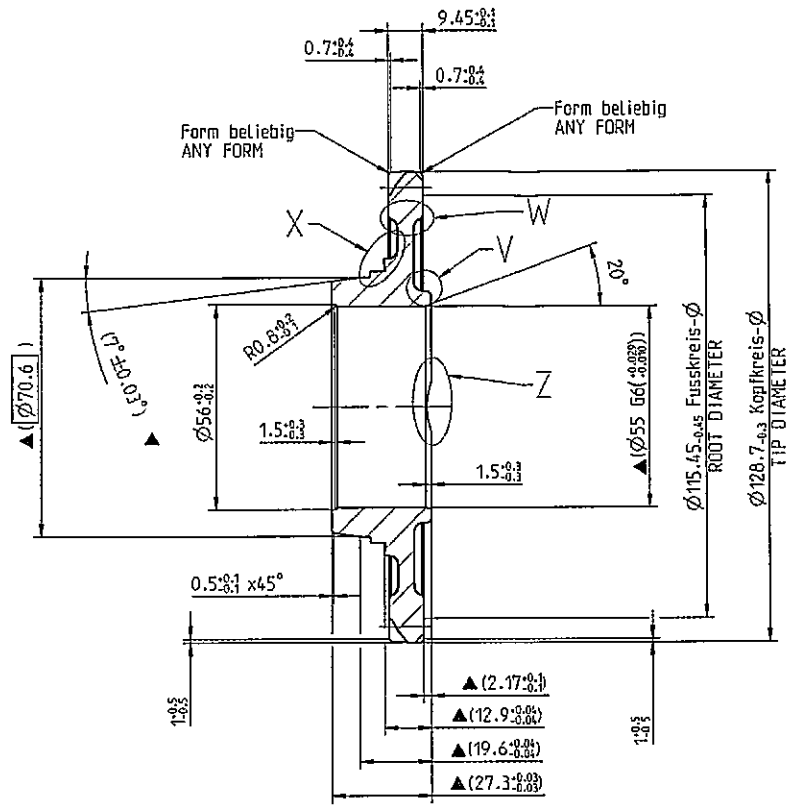

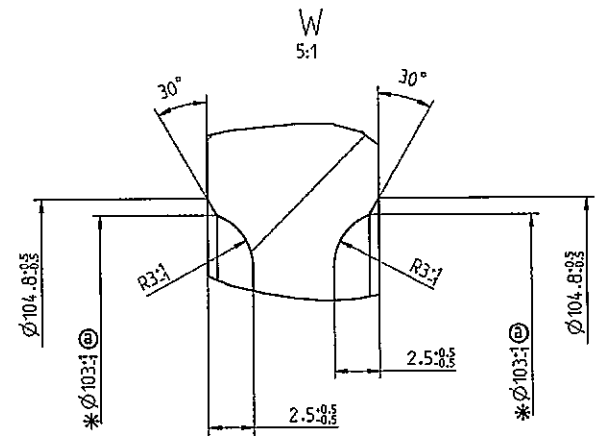

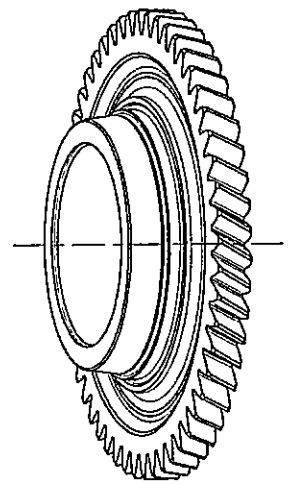

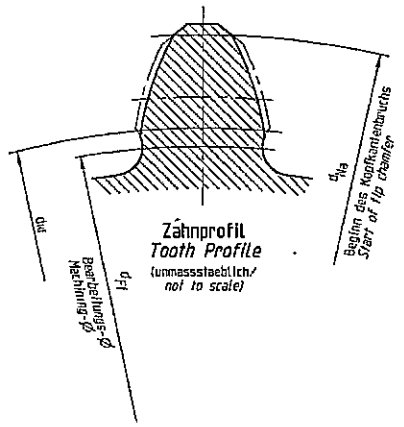

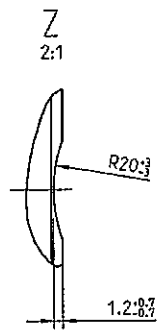

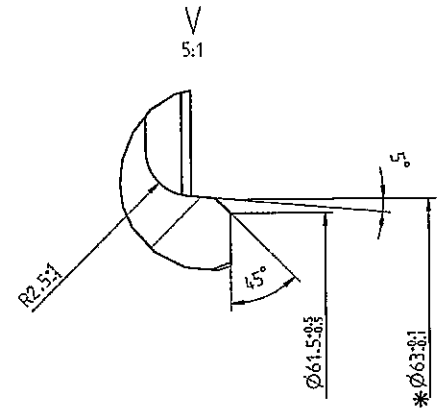

vorbearbeitet, Fertigmass▲ (...)
siehe 250.1.3648.06
PREMACHINED, FINISHED DIMENSION▲ (...)
SEE 250.1.3648.06

Naehere Angaben zur Verzahnung
siehe Verzahnungsblatt gleicher Nummer
FURTHER GEAR DATA SEE
DATA SHEET SAME NUMBER

Kanten an Laufverzahnungen \ *Tooth chamfers*
unmassstaeblich \ *not to scale*

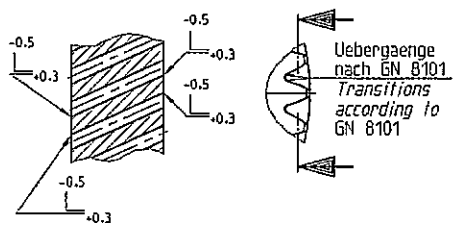

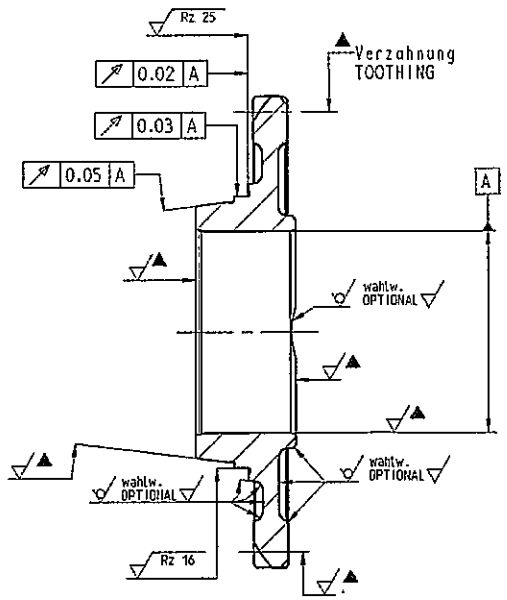

Aussenverzahnung / EXTERNAL GEAR		
Zahnwelle/ SPLINE DATA EXTERNAL		
Bezugsdurchmesser / PEFERENCE DIAMETER d_B		
Modul / NORMAL MODULE m_n		2.05
Zaehnezahl / NUMBER OF TEETH z		52
Eingriffswinkel / NORMAL PRESSURE ANGLE α_n		17.5°
Schraegungswinkel / HELIX ANGLE β		28.0°
Richtung / HAND OF HELIX		RIGHT. rechts
Bezugsprofil / BASIC RACK		
Profilverschiebung/ADDENDUM MODIFICATION $x \cdot m_n$	Nennmass / NOMINAL	1.202
Qualitaet / GEAR TOOTH QUALITY (DIN3961)		9
Toleranzklasse / TOLERANCE CLASS		
Zahndicke / TOOTH THICKNESS s_n (Lehrenmass / GAGE DIMENSION)	effective max	
Zahndicke / TOOTH THICKNESS s_n (Einzelmessung / ACTUAL)	max.	3.900
	min	3.865
Messkugel-Ø / BALL DIA D_M		3.0
Pruefmass / MEASUREMENT OVER BALLS M_{dK} (Einzelmessung / ACTUAL)	max.	125.549
	min.	125.449

vorbearbeitet, Fertigmass▲ (...)
siehe 250.1.3648.06
PREMACHINED, FINISHED DIMENSION▲ (...)
SEE 250.1.3648.06

Rz 40

0.3 / 0.1

See ppsf DOC.
3649.04 "b"

✱ Rohteilgeometrie
RAW PART GEOMETRY

Haerteangaben siehe
Schaltrad Rw.Gg. vst. 250.1.3648.06
HEAT TREATMENT SEE
SPEED GEAR REV. CPL. 250.1.3648.06

GCG 803001	0	<M>					
	0	<C>					
GN 3010	0	<M>					
	0	<C>					
	0	<A>	b	4x	000520.HP.2	View X: 74.05±0.015 war/WAS 74.065±0.015; 0.3±0.1 und/AND 26°32' hinzu/ADDED; Kantenbruch/CHAMFER -0.3 entfernt/DELETED	20160419
CAD Prof Engineer			a	2x	35670	View W: Ø103±1 war/WAS Ø103±0.1 (2x)	20140812
			---	---	35834	Spezifikationsreifegrad F erteilt / MATURITY LEVEL OF SPECIFICATION F APPROVED	20140404

Massstab / SCALE: M: 1:1 (--)

Buchst. / CHANGE INDEX | Anzahl / NUMBER | Aend.-Nr. / CHANGE ORDER NO. | Aenderung / MODIFICATION: --nur mittels CAD zulaessig FREA ueberpruefen-- / --ONLY ALLOWED BY CAD; CHECK FREA-- | Datum / DATE

Allgemeintoleranzen fuer Langenmasse, Form und Lage ISO 2768 - mH
gebrochene Kanten, Radien und Winkelmasse: ISO 2768 - v
GENERAL TOLERANCES FOR LINEAR DIMENSIONS, FORM AND POSITION ISO 2768 - mH, CHAMFERS, RADII AND ANGULAR DIMENSIONS ISO 2768 - v

Informationen auf dieser Zeichnung sind ohne Angaben zu Verwendung und Freigabe unverbindlich.
INFORMATION ON THIS DRAWING PROVIDED WITHOUT OBLIGATION IF USAGE AND RELEASE ARE NOT SHOWN.

Auswertung der Durchmessermessung erfolgt nach der Gauss-Methode (Arithmetischer Mittelwert)
EVALUATION OF THE DIAMETER MEASUREMENT IS EARRIED OUT ACCORDING TO THE GAUSS METHOD (ARITHMETICAL MEAN VALUE)

Form- und Lagetolerierung FORM AND POSITION TOLERANCES EN ISO 1101 | Tolerierung TOLERANCING ISO 8015 | Oberflaechenangaben SURFACE TEXTURE GN 4005 | Werkstuckkanten BREAK EDGES ISO 13715

Werkstoff / MATERIAL: GCG_805000_02_20MnCrS5
Halbzeug SEMI-FINISHED: -
Gesamtoberflaeche SURFACE AREA: 36607 mm²
Masse MASS: 0.764 kg
Gelbenetzte Oberflaeche OIL WETTED SURFACE: 0 mm²

GETRAG
Getriebe- und Zahnradfabrik Hermann Hagenmeyer GmbH & Co KG
Schutzvermerk GMO ISO 16016 beachten PROTECTION PER ISO 16016

Benennung / ITEM NAME: SPEED GEAR REV.
Schaltrad Rw. Gang

Artikel-Nr. / ITEM NO.: 2501364905
CAD-Modell: 2501364905
Blatt/SHEET 1 von/OF 1 | Reifegrad MATURITY: F | Format SIZE: A1

Ersatz fuer / SUBSTITUTE FOR | UNPLOTTED DATA: Zeichn. / DRW.: MODEL: | CHECKED IN BY: Azapi.Raidt 27.04.2016 12:43:31 | CHECKED IN ON (DD.MM.YYYY) Aenderungs-Index: Azapi.Raidt 27.04.2016 12:43:31 | VERSION: 2.0

Document Revision: 20160427124553, printed on 2017-08-31 at 11:44 by Mirko.Vicenti

Design Release: 2016-05-19 Agapt.Raidt
Function Release: 2016-05-19 Michael Gierlatis
Geardata Release: 2014-05-08 I.A. Fabrizio.Cricenti
Material Release: not required
SAP Release: 2016-05-19 Hartmut Kobald
Document Status: approved

Fuer Freigabeinformation freihalten! KEEP FREE FOR RELEASE INFORMATIONS

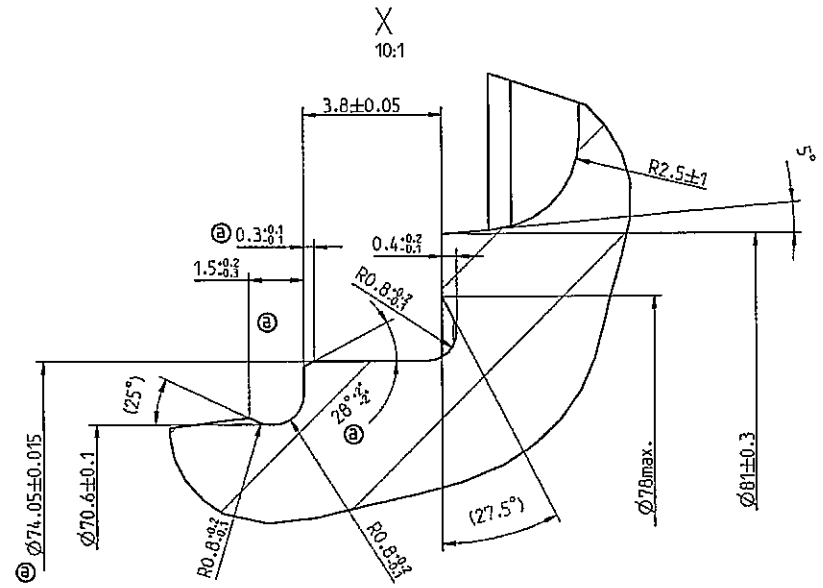

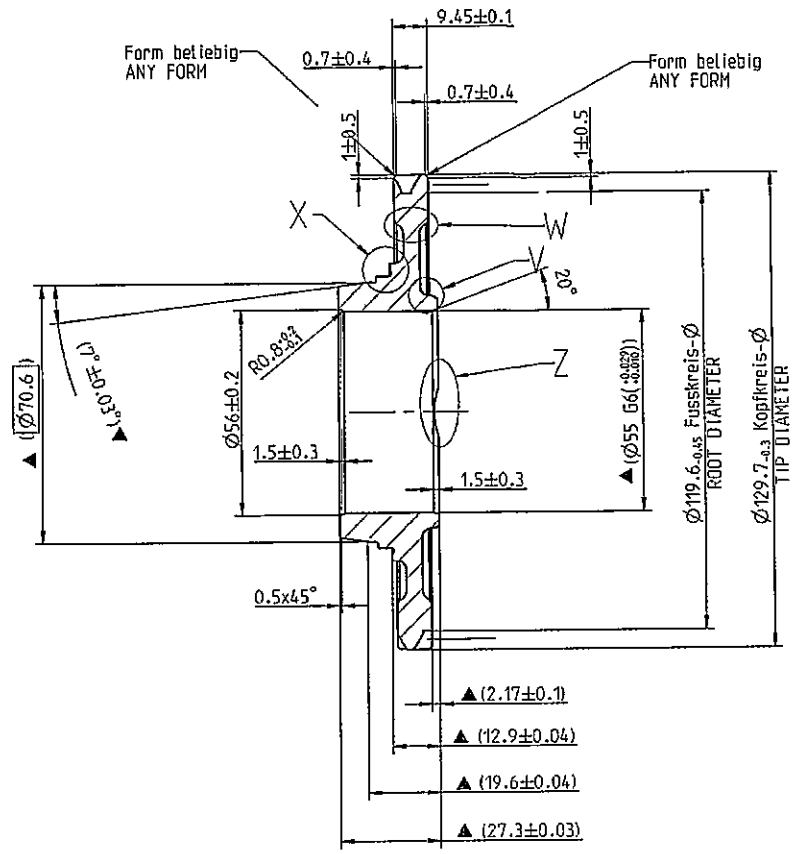

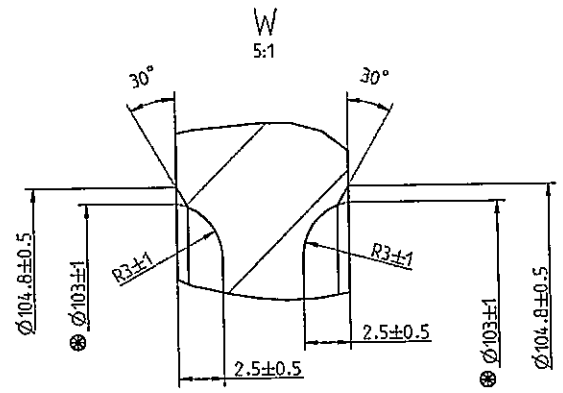

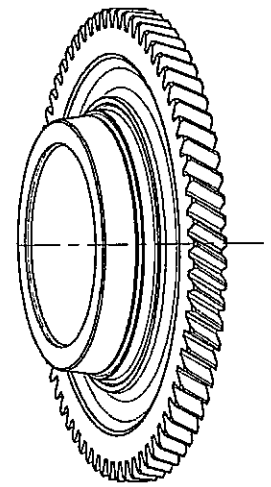

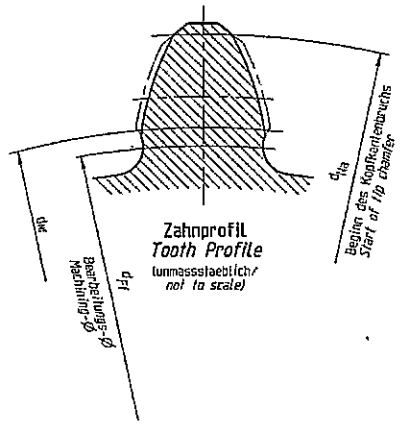

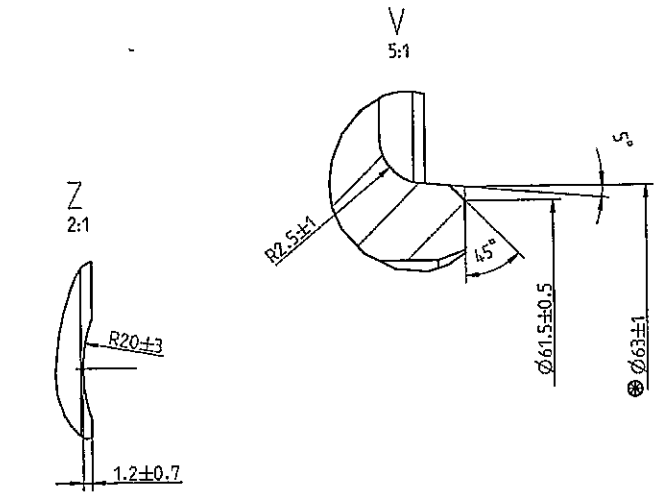

vorbearbeitet, Fertigmass▲ (...)
siehe 250.1.4228.05
PREMACHINED, FINISHED DIMENSION▲ (...)
SEE 250.1.4228.05

Naehere Angaben zur Verzahnung
siehe Verzahnungsblatt gleicher Nummer
FURTHER GEAR DATA SEE
DATA SHEET SAME NUMBER

Kanten an Laufverzahnungen / *Tooth chamfers*
unmasstaeblich / *not to scale*

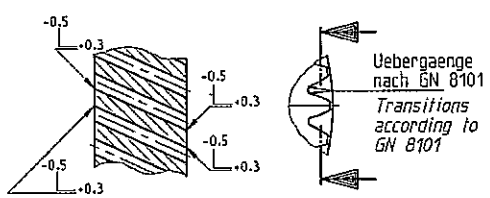

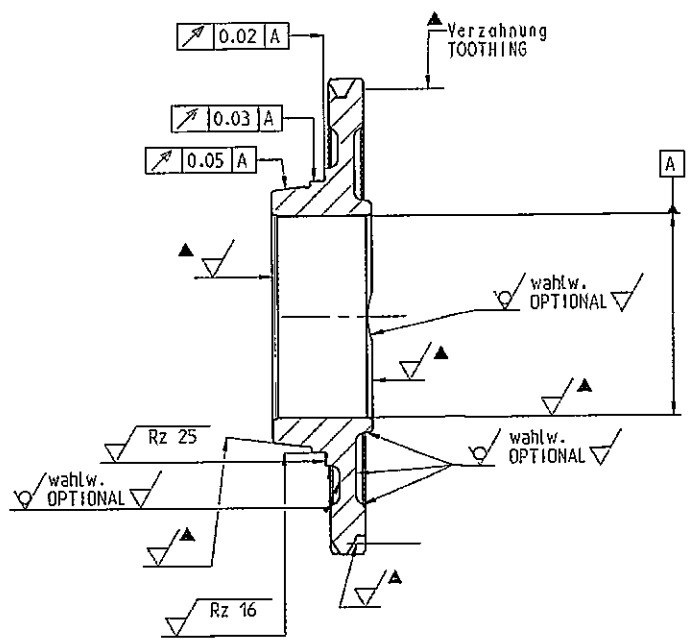

Rz 40

Rohteilgeometrie
RAW PART GEOMETRY

Haerteangaben siehe
Schaltrad Rw.Gg. vst. 250.1.4228.05
HEAT TREATMENT SEE
SPEED GEAR REV. CPL. 250.1.4228.05

Aussenverzahnung / EXTERNAL GEAR		
Zahnwelle/ SPLINE DATA EXTERNAL		
Bezugsdurchmesser / REFERENCE DIAMETER d_B		
Modul / NORMAL MODULE m_n		1.600
Zaehnezahl / NUMBER OF TEETH z		67
Eingriffswinkel / NORMAL PRESSURE ANGLE α_n		17.5°
Schraegungswinkel / HELIX ANGLE β		31.0°
Richtung / HAND OF HELIX		RIGHT, rechts
Bezugsprofil / BASIC RACK		
Profilverschiebung/ADDENDUM MODIFICATION $x \cdot m_n$	Nennmass / NOMINAL	-0.065
Qualitaet / GEAR TOOTH QUALITY (DIN3960)		9
Toleranzklasse / TOLERANCE CLASS		
Zahndicke / TOOTH THICKNESS s_n (Lehrenmass / GAGE DIMENSION)	effective max.	
Zahndicke / TOOTH THICKNESS s_n (Einzelmessung / ACTUAL)	max.	2.394
	min.	2.359
Messkugel-Ø / BALL DIA D_M		3.00
Pruefmass / MEASUREMENT OVER BALLS M_{dK} (Einzelmessung / ACTUAL)	max.	129.587
	min.	129.484

GCG B03001	0	<M>				See PPAP DOC	
	0	<C>					
GN 3010	0	<M>				3649.04 "b"	
	0	<C>					
	0	<A>					
CAD Prof. Engineer	a	4x	000520.HUP.2	View X: 74.05±0.015 war/WAS 74.065±0.015, 0.3±0.1 und/AND 28°±2° hinzu/ADDED; Kantenbruch/CHAMFER -0.1 entfernt/DELETED			20160419
	---	---	35834	Serienfreigabestand F erreicht / MATURITY LEVEL OF SPECIFICATION F APPROVED			20140403

Massstab / SCALE: M: 1.1 (--)

Bisher CHANGE INDEX	Anzahl NUMBER	Aend.-Nr. CHANGE ORDER NO.	Aenderung --nur mittels CAD zulaessig: FMEA ueberprueft-- MODIFICATION --ONLY ALLOWED BY CAD; CHECK FMEA--	Datum DATE

Allgemeintoleranzen fuer Laengenmasse, Form und Lage ISO 2768 - mH gebrochene Kanten, Radien und Winkelmasse ISO 2768 - v
GENERAL TOLERANCES FOR LINEAR DIMENSIONS, FORM AND POSITION ISO 2768 - mH, CHAMFERS, RADII AND ANGULAR DIMENSIONS ISO 2768 - v

Informationen auf dieser Zeichnung sind ohne Angaben zu Verwendung und Freigabe unverbindlich.
INFORMATION ON THIS DRAWING PROVIDED WITHOUT OBLIGATION IF USAGE AND RELEASE ARE NOT SHOWN.

Auswertung der Durchmessermessung erfolgt nach der Gauss-Methode (Arithmetischer Mittelwert)
EVALUATION OF THE DIAMETER MEASUREMENT IS CARRIED OUT ACCORDING TO THE GAUSS METHOD (ARITHMETICAL MEAN VALUE)

Form- und Lagetolerierung FORM AND POSITION TOLERANCES EN ISO 1101	Tolerierung TOLERANCING ISO 8015	Oberflaechenangaben SURFACE TEXTURE EN 4005	Werkstuecknaehen BREAK EDGES ISO 13715

Werkstoff / MATERIAL: GCG_B05000_02_20MnCrS5
Halbzeug SEMI-FINISHED: -
benetzte Oberflaeche OIL WETTED SURFACE: 0 mm²
Gesamtoberflaeche SURFACE AREA: 38047 mm²
Masse MASS: 0.794 kg
Schutzvermerk nach ISO 16016 beachten PROTECTION PER ISO 16016

GETRAG
Getriebe- und Zahnradfabrik Hermann Hagenmeyer GmbH & Cie KG

Benennung / ITEM NAME: SPEED GEAR REV.
Schaltrad Rw. Gang
Ersatz fuer SUBSTITUTE FOR: -
Artikel-Nr. / ITEM NO.: 2501422904
CAD-Modell: 2501422904
Blatt/SHEET 1 von/OF 1
Reifegrad MATURITY: F
Format SIZE: A1

MATERIAL DATA	CHECKED BY	CHECKED IN CAD on mm,yyyy Format VERSION
Bearbeitung / DRAW.	Assmann Ralph	17.02.2016 13:32:02 1.
Pruefung / CHECK.	Assmann Ralph	17.02.2016 13:32:02 1.

Document Revision: 20160505(0135302, printed on 2017-03-31 at 11:45 by Mirko.Vicenti