312360

GETRAG Part Submission Warrant

Part Name: Speed Gear 3 RD
Customer Part Number: 250.1.5169.76
Shown on Drawing No.: 250.1.5169.76
Organization Part #:
Engineering Change Level: a 35670
Dated: 31 07 2014
Additional Engineering Changes:
Dated:
Safety and/or Government Regulation: ☐ Yes ☑ No
Purchase Order No.:
Weight (kg): 1,247
Checking Aid No.:
Checking Aid Engineering Change Level:
Dated:

ORGANIZATION MANUFACTURING INFORMATION

GETRAG MODUGNO
Organization Name & Supplier/Vendor Code
VIA DEI CICLAMINI N°4
Street Address
MODUGNO BARI 70026 ITALY
City Region Postal Code Country

CUSTOMER SUBMITTAL INFORMATION

EDISON
Customer Name/Division
Buyer/Buyer Code
TYP 250
Application

MATERIALS REPORTING

Has customer-required Substances of Concern information been reported? ☑ Yes ☐ No ☐ n/a
Submitted by IMDS or other customer format:

Are polymeric parts identified with appropriate ISO marking codes? ☐ Yes ☐ No ☑ n/a

REASON FOR SUBMISSION (Check at least one)

- ☐ Initial Submission
- ☑ Engineering Change(s)
- ☐ Tooling: Transfer, Replacement, Refurbishment, or additional
- ☐ Correction of Discrepancy
- ☐ Tooling Inactive > than 1 year
- ☐ Change to Optional Construction or Material
- ☐ Supplier or Material Source Change
- ☐ Change in Part Processing
- ☐ Parts Produced at Additional Location
- ☐ Other - please specify below

REQUESTED SUBMISSION LEVEL (Check one)

- ☐ Level 1 - Warrant only (and for designated appearance items, an Appearance Approval Report) submitted to customer.
- ☐ Level 2 - Warrant with product samples and limited supporting data submitted to customer.
- ☑ Level 3 - Warrant with product samples and complete supporting data submitted to customer.
- ☐ Level 4 - Warrant and other requirements as defined by customer.
- ☐ Level 5 - Warrant with product samples and complete supporting data reviewed at organization's manufacturing location.

SUBMISSION RESULTS

The results for ☑ dimensional measurements ☑ material and functional tests ☐ appearance criteria ☑ statistical process package
These results meet all drawing and specification requirements: ☑ Yes ☐ NO (If "NO" - Explanation Required)
Mold / Cavity / Production Process

DECLARATION

I hereby affirm that the samples represented by this warrant are representative of our parts which were made by a process that meets all Production Part Approval Process Manual 4th Edition Requirements. I further affirm that these samples were produced at the production rate of ____ / ____ hours. I also certify that documented evidence of such compliance is on file and available for review. I have noted any deviations from this declaration below.

EXPLANATION / COMMENTS: Second Submission PPAP
Parameters used for final measures on cone reported on the final drawing

Is each Customer Tool properly tagged and numbered? ☐ Yes ☐ No ☑ n/a

Organization Authorized Signature
Date: 12 08 2014
Print Name: Pennacchia Vincenzo
Phone No.: tel 390805858580
Fax No.:
Title: GPS 1 Leader
E-mail: vincenzo.pennacchia@getrag.com

FOR CUSTOMER USE ONLY (IF APPLICABLE)

Part Warrant Disposition: ☒ Approved ☐ Rejected ☐ Other
Customer Signature
Date: 13.08.14
Print Name: FRANCESCO SPEZZACATENA
Customer Tracking Number (optional)

(*) NO CHANGE IN MEAS. PROCESS.
SAME PARAMETERS ALREADY IN USE SINCE INDEX 11_4

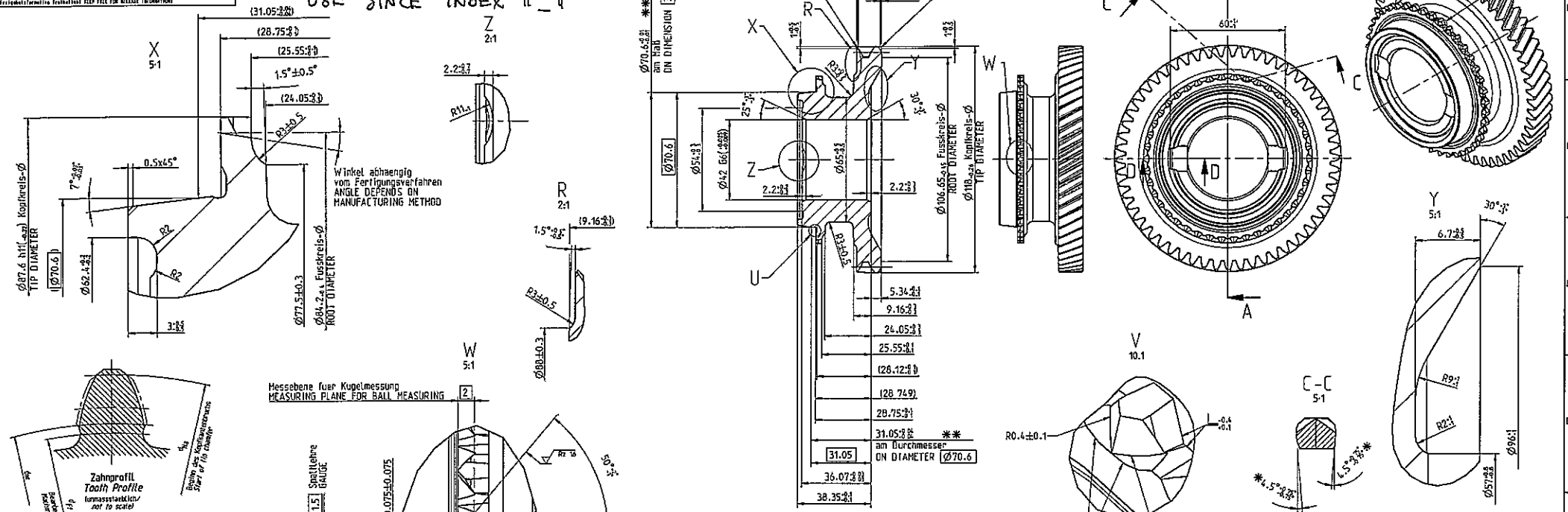

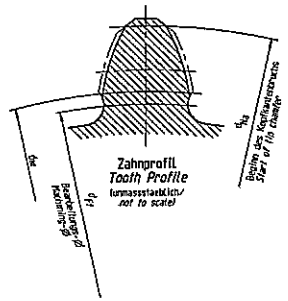

Kanten an Laufverzahnungen \ Tooth chamfers
unmasstaeblich \ not to scale

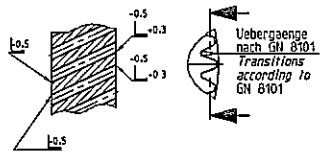

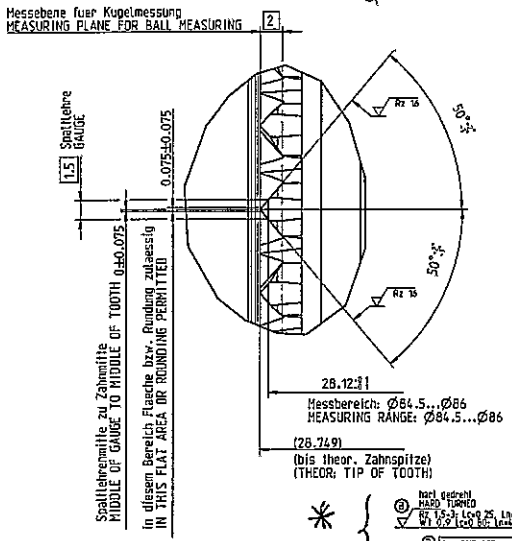

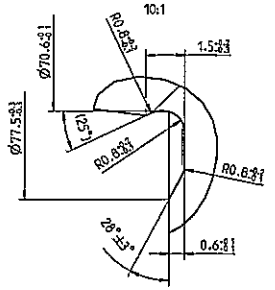

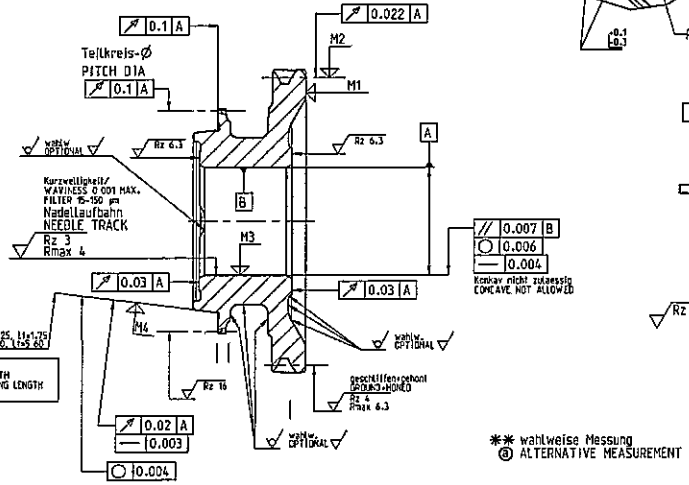

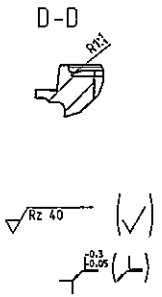

Fuer GETRAG intern.
Dieses Bauteil ist Bestandteil der Gruppen Nummer 250.1.6487.00
Lieferant/Hersteller Barl
GETRAG INTERNAL ONLY.
THIS COMPONENT IS PART OF GROUP NUMBER 250.1.6487.00
SUPPLIER/MANUFACTURER: Barl

Fuer die Lieferung und Kennzeichnung im Data Matrix Code (Bauteil und/oder Verpackung) muss die Gruppen Nummer 250.1.6487.00 verwendet werden.
FOR SHIPPMENT AND IDENTIFICATION WITHIN THE DATA MATRIX CODE (COMPONENT AND/OR PACKAGING) THE GROUP NUMBER 250.1.6487.00 HAS TO BE USED.

PPAP nach / ACCORDING TO 250.1.5169.76

* gemessen nach GN 8005
MEASURED ACCORDING TO GN 8005

naehere Angaben zur Verzahnung siehe Verzahnungsblatt gleicher Nummer
FURTHER GEAR DATA SEE DATA SHEET SAME NUMBER

Aussenverzahnung / EXTERNAL GEAR			in Messebene
Zahnwelle/ SPLINE DATA EXTERNAL			
Bezugsdurchmesser / REFERENCE DIAMETER d_B		88	
Modul / NORMAL MODULE m_n	1.750	2.0	
Zahnezahl / NUMBER OF TEETH z	56	42	
Eingriffswinkel / NORMAL PRESSURE ANGLE α_n	17.5°	30°	
Schraegungswinkel / HELIX ANGLE β	30.0°	0°	
Richtung / HAND OF HELIX	LEFT, links	STRAIGHT/gerade	
Bezugsprofil / BASIC RACK			
Profilverschiebung/ADDENDUM MODIFICATION $x \cdot m_n$ (Normalmass / NORMAL)	-0.159	0.9	
Qualitaet / GEAR TOOTH QUALITY DIN/ISO	7		
Toleranzklasse / TOLERANCE CLASS		10	
Zahndicke / TOOTH THICKNESS s_n (Bezugsmass / BASE DIMENSION) effective max.		4.016	
Zahndicke / TOOTH THICKNESS s_n (Istuebermessung / ACTUAL) max.	2.570	3.975	3.870
min.	2.545	3.904	3.796
Messkugel-Ø / BALL DIA D_M	2.50	5	
Pruefmass / MEASUREMENT OVER BALLS M_{DK} (Istuebermessung / ACTUAL) max.	114.655	94.519	94.406
min.	114.569	94.413	94.295

Technische Sauberkeit / TECHNICAL CLEANLINESS:

Es gelten die Sauberkeitsanforderungen nach GN 4340-1
CLEANLINESS REQUIREMENTS OF THE GN 4340-1 HAVE TO BE ABIDED

einsatzgehaertet und angelassen
M1 (Oberflaechenhaerte) : 80.5+2.5 HRA
M2 (Zahnflanke) : CHD (Eht) 550=0.5+0.4
M3 (Bohrung) : CHD (Eht) 550=0.3min.
M4 (Konus) : CHD (Eht) 550=0.4+0.4
M5 (Kernhaerte) . min. 300 HV10

CASE HARDENED AND TEMPERED
M1 (CASE HARDNESS) : 80.5+2.5 HRA
M2 (TOOTH FLANK) : CHD (Eht) 550=0.5+0.4
M3 (BORE) : CHD (Eht) 550=0.3min.
M4 (CONE) : CHD (Eht) 550=0.4+0.4
M5 (INSIDE BASE OF TOOTH) : min. 300 HV10

** wahlweise Messung
(*) ALTERNATIVE MEASUREMENT

GEG 803001	0	-N>				
	0	<C>				
GN 3010	0	-N>				
	0	-C>				
	0	<A>				
	a	3x	35670	Oberflaechenbearbeitung/SURFACE FINISH geaendert/CHANGED. Test mit/WITH NEW; wahlweise Messung/ALTERNATIVE MEASUREMENT ww/WAS wahlweise Messung/OPTIONAL MEASUREMENT		20140731
	---	---	35834	Spezifikationserstellungsgrad 3 erteilt / MATURITY LEVEL OF SPECIFICATION 3 approved		20140404

Massstab / SCALE M: 1 1 (--)

Aenderungen nur mittels CAD Aenderungsdienst ONLY ALLOWED BY CAD CHECK FREA... | Datum DATE

Allgemeintoleranzen fuer Laengenmasse, Form und Lage ISO 2768 - mK
Informationen auf dieser Zeichnung sind ohne Angaben zu Verwendung und Freigabe unverbindlich.
INFORMATION ON THIS DRAWING PROVIDED WITHOUT OBLIGATION OF USAGE AND RELEASE ARE NOT SHOWN

Gratbildung an Durchgangsbohrungen gemäß DIN 6784 - A
Formatierung der Durchmessermasse gemäß ISO 2768 - mK
FORMATTING OF THE DIAMETER MEASUREMENTS IS ALLOWED BUT ACCORDING TO THE BASIC METRIC ISO 2768 - mK

Form- und Lagetolerierung FORM AND POSITION TOLERANCES	Toleranzmass TOLERANCING ISO 8015	Oberflaechenrauheit SURFACE TEXTURE GN 4001	Werkstueckkanten BREAK EDGES ISO 13715

Werkstoff / MATERIAL: DC06D5000-02_20MnCrS5

Haerten SEMI-FINISHED -

Oberflaeche DIN WETTED SURFACE

Gesamtoberflaeche / SURFACE AREA 44798 mm² | Masse MASS 4.247 kg | Schutzvermerk nach ISO 16016 beachten PROTECTION NOTE ISO 16016

Benennung / ITEM NAME: Schaltrad 3. Gang
SPEED GEAR 3RD.

Artikel-Nr. / ITEM NO. 2501516976
CAD-Modell: 2501516976

Blattgroesse / Sheet size A1

GETRAG

Ersatz fuer / SUBSTITUTE FOR -

REFERENZ DATA	TEILEKOPF / HEAD	2501516976	3
Zeichner / Drafter	Barl	10.10.2014	1
Pruefer / Checker	Barl	10.10.2014	1
Freigabe / Release	Barl	10.10.2014	1

GETRAG

Via dei Ciclamini 4 Modugno Bari

Sala Metrologica GPS5

Oggetto:	SR3 PZ 1
Numero:	5169 PPAP
Operatore:	TURNO C
Data, ora:	27/04/2014, 17:18
Nota:	CONO FORO PIANOKK PIANO
Tastatore:	MFW-250 50

MACCHINA: MOA 416121 001

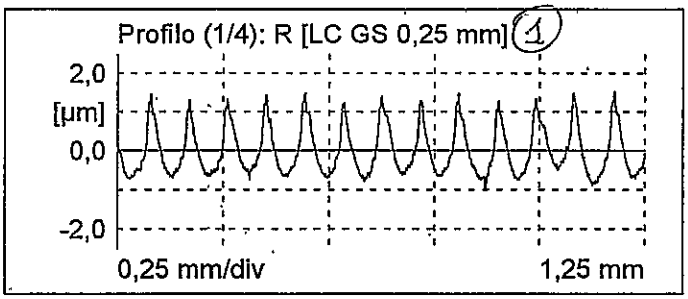

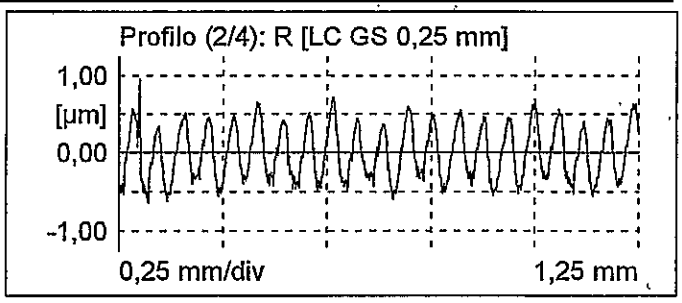

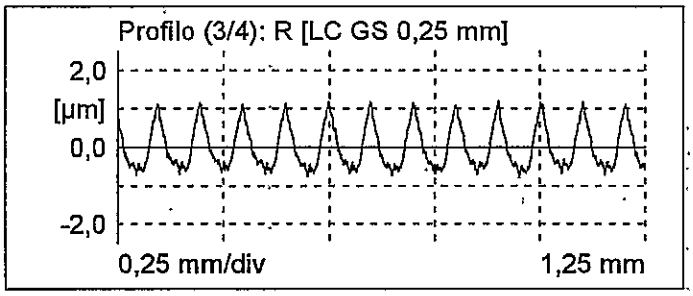

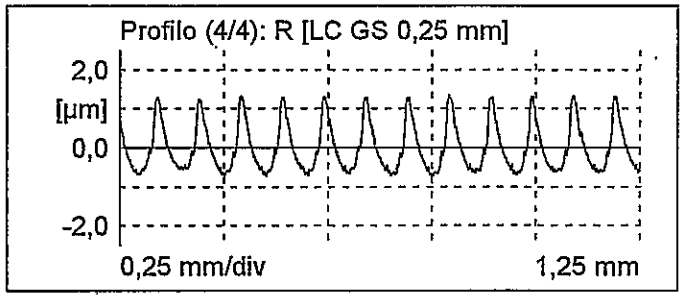

1: LS	2,5	µm
1: LT (3)	1,75	mm
1: LM (2)	1,25	mm
1: Z	5	
1: VB	±250,0	µm
1: Ra	0,53	µm
1: Rmax	2,45	µm
1: Rz	2,29	µm
2: Ra	0,30	µm
2: Rmax	1,60	µm
2: Rz	1,29	µm
3: Ra	0,49	µm
3: Rmax	1,98	µm
3: Rz	1,91	µm
4: Ra	0,51	µm
4: Rmax	2,07	µm
4: Rz	2,02	µm

(1) - (2) - (3) : MISURA EFFETTUATA IN ACCORDO A RICHIESTA DWG INDICE "--" GIÀ DAL PRIMO PSW SU INDICE "Ø"

PERTHOMETER CONCEPT

GETRAG

Via dei Ciclamini 4 Modugno Bari

Sala Metrologica GPS5

Oggetto:	SR3 5169 PEZZO 1
Numero:	PPAP
Operatore:	TURNO D
Data, ora:	16/05/2014, 08:05
Nota:	ONDULOSITà CONO-
Tastatore:	MFW-250 CAL
MACCHINA:	MOA 416121 002

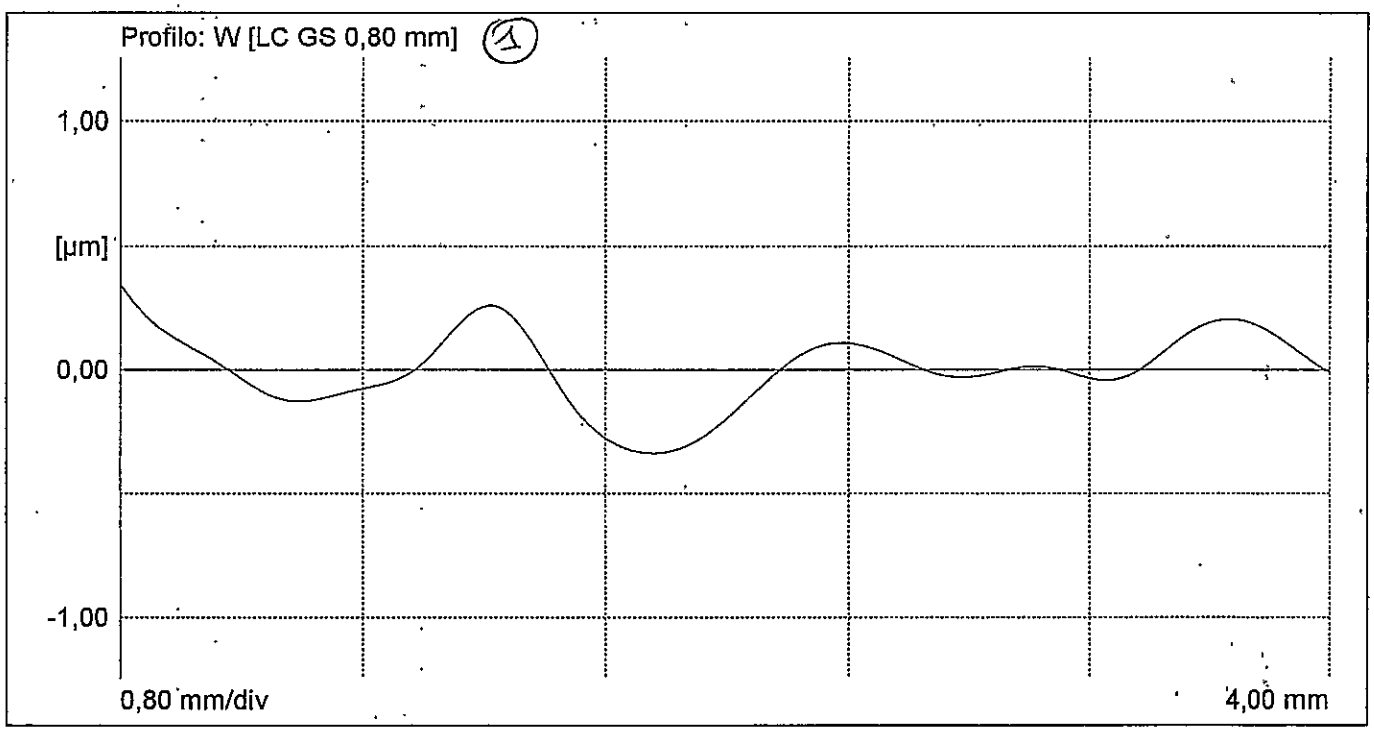

LT 3	5,60	mm
LM 2	4,00	mm
Z	5	
VB	±250	µm
LC-W (GS)	0,80	mm
Wt	0,68	µm

1 2 3 MISURA EFFETTUATA IN ACCORDO A RICHIESTA DWG INDICE "–" CHA' DAL PRIMO PSW SU INDICE "2"

PERTHOMETER CONCEPT