312543

GETRAG

Part Submission Warrant

Part Name: Gear 2nd
Customer Part Number: 250.1.3640.75
Shown on Drawing No.: 250.1.3640.75
Organization Part #:
Engineering Change Level: b C007260_MIP_1
Dated: 10-gen-17
Additional Engineering Changes:
Dated:
Safety and/or Government Regulation: ☐ Yes ☑ No
Purchase Order No.:
Weight (kg): 0.6650
Checking Aid No.:
Checking Aid Engineering Change Level:
Dated:

ORGANIZATION MANUFACTURING INFORMATION

GETRAG MODUGNO
Organization Name & Supplier/Vendor Code

VIA DEI CICLAMINI N°4
Street Address

MODUGNO BARI 70026 ITALY
City Region Postal Code Country

CUSTOMER SUBMITTAL INFORMATION

Customer Name/Division

Buyer/Buyer Code

DCT250
Application

MATERIALS REPORTING

Has customer-required Substances of Concern information been reported? ☐ Yes ☐ No ☑ n/a
Submitted by IMDS or other customer format:

Are polymeric parts identified with appropriate ISO marking codes? ☐ Yes ☐ No ☑ n/a

REASON FOR SUBMISSION (Check at least one)

- ☐ Initial Submission
- ☑ Engineering Change(s)
- ☐ Tooling: Transfer, Replacement, Refurbishment, or additional
- ☐ Correction of Discrepancy
- ☐ Tooling Inactive > than 1 year
- ☐ Change to Optional Construction or Material
- ☐ Supplier or Material Source Change
- ☐ Change in Part Processing
- ☐ Parts Produced at Additional Location
- ☐ Other - please specify below

REQUESTED SUBMISSION LEVEL (Check one)

- ☐ Level 1 - Warrant only (and for designated appearance items, an Appearance Approval Report) submitted to customer.
- ☐ Level 2 - Warrant with product samples and limited supporting data submitted to customer.
- ☑ Level 3 - Warrant with product samples and complete supporting data submitted to customer.
- ☐ Level 4 - Warrant and other requirements as defined by customer.
- ☐ Level 5 - Warrant with product samples and complete supporting data reviewed at organization's manufacturing location.

SUBMISSION RESULTS

The results for ☑ dimensional measurements ☐ material and functional tests ☐ appearance criteria ☐ statistical process package
These results meet all drawing and specification requirements: ☑ Yes ☐ NO (If "NO" - Explanation Required)
Mold / Cavity / Production Process

DECLARATION

I hereby affirm that the samples represented by this warrant are representative of our parts which were made by a process that meets all Production Part Approval Process Manual 4th Edition Requirements. I further affirm that these samples were produced at the production rate of 2000 / 24 hours. I also certify that documented evidence of such compliance is on file and available for review. I have noted any deviations from this declaration below.

EXPLANATION / COMMENTS: **Drawing correction with standard Tip diameter tolerance used for topping machining (increased)**

Is each Customer Tool properly tagged and numbered? ☐ Yes ☐ No ☑ n/a

Organization Authorized Signature: Camarda
Date: 24/01/2017
Print Name: Camarda Ettore
Phone No.: tel 390805858220
Fax No.:
Title: Area 1 Manager
E-mail: ettore.camarda@magna.com

FOR CUSTOMER USE ONLY (IF APPLICABLE)

Part Warrant Disposition: ☑ Approved ☐ Rejected ☐ Other
Customer Signature:
Date: 24.01.17
Print Name:
Customer Tracking Number (optional):

GETRAG Production Part Approval

DIMENSIONAL TEST RESULTS

Organization:	GETRAG	Part Number:	250.1.3640.75
Supplier/Vendor Code:	GETRAG Modugno	Part Name:	Gear 2nd
INSPECTION FACILITY:		Design Record Change Level:	10/01/2017
NA		Engineering Change Documents:	b C007260_MIP_1

Organization Measurement Results (Data)

Item	Dimension/Specification	Specification / Limits		Test Date	Qty. Tested	1	2	3	4	5	controllo distruttivo	Ok	Not Ok
1	Diametro di testa	118.600	118.340		5	118.484	118.487	118.478	118.483	118.475		ok	

SIGNATURE	TITLE	DATE
Vicenti D.	ME	24/01/2017

Ruota cilindrica Evolvente/Elica

Nr. prog.: STI0412_06 0	P26 B7681	Controllore:	TURNO B	Data:	24.01.2017 10:14
Denominazione:	ZR2	Numero denti z	51	Largh.fasc.dent. b	17.5mm
Numero disegno.:	250.1.3640.75-IF	Modulo m	2mm	Tratto evolv. La	5.66mm
Commessa/serie nr.:	1	Angolo pressione	20°00'00"	Tratto elica Lß	14mm
Masch.Nr.:	M001 Spindel: Formnest	Angolo elica	-22°00'00"	Inizio elab. M1	19.78mm
Untersuchungszweck:	Laufende Messung	Ø Base db	102.403mm	Palpatore Ø	(#2C) 1mm
Werkzeug:	Charge:	Ang. Base	-20°36'38"	Fat.scor.pr. x	.888

TIRO

Testa-Ø: 118.484mm [118.34/118.6]

VDI

Docum.archiviato elettronicamente.Archiviazione cartacea non necessaria

Copyright (c) Klingelnberg GmbH

KLINGELNBERG

Ruota cilindrica Evolvente/Elica

Nr. prog.: STI0412_06 0	P26 B7681	Controllore:	TURNO B	Data:	24.01.2017 10:15
Denominazione:	ZR2	Numero denti z	51	Largh.fasc.dent. b	17.5mm
Numero disegno.:	250.1.3640.75-IF	Modulo m	2mm	Tratto evolv. La	5.66mm
Commessa/serie nr.:	2	Angolo pressione	20°00'00"	Tratto elica Lß	14mm
Masch.Nr.:	M001 Spindel: Formmeat	Angolo elica	-22°00'00"	Inizio elab. M1	19.78mm
Untersuchungszweck:	Laufende Messung	Ø Base db	102.403mm	Palpatore Ø	(#2C) 1mm
Werkzeug:	Charge:	Ang. Base	-20°36'38"	Fat.scor.pr. x	.888

TIRO

Testa-Ø: 118.487mm [118.34/118.6]

VDI

Docum.archiviato elettronicamente.Archiviazione cartacea non necessaria

Copyright (c) Klingelnberg GmbH

KLINGELNBERG

Ruota cilindrica Evolvente/Elica

Nr. prog.: STI0412_06 0	P26 B7681	Controllore:	TURNO B	Data:	24.01.2017 10:22
Denominazione:	ZR2	Numero denti z	51	Largh.fasc.dent. b	17.5mm
Numero disegno.:	250.1.3640.75-IF	Modulo m	2mm	Tratto evolv. La	5.66mm
Commessa/serie nr.:	3	Angolo pressione	20°00'00"	Tratto elica Lß	14mm
Masch.Nr.:	M001 Spindel: Formmastel	Angolo elica	-22°00'00"	Inizio elab. M1	19.78mm
Untersuchungszweck:	Laufende Messung	Ø Base db	102.403mm	Palpatore Ø	(#2C) 1mm
Werkzeug:	Charge:	Ang. Base	-20°36'38"	Fat.scor.pr. x	.888

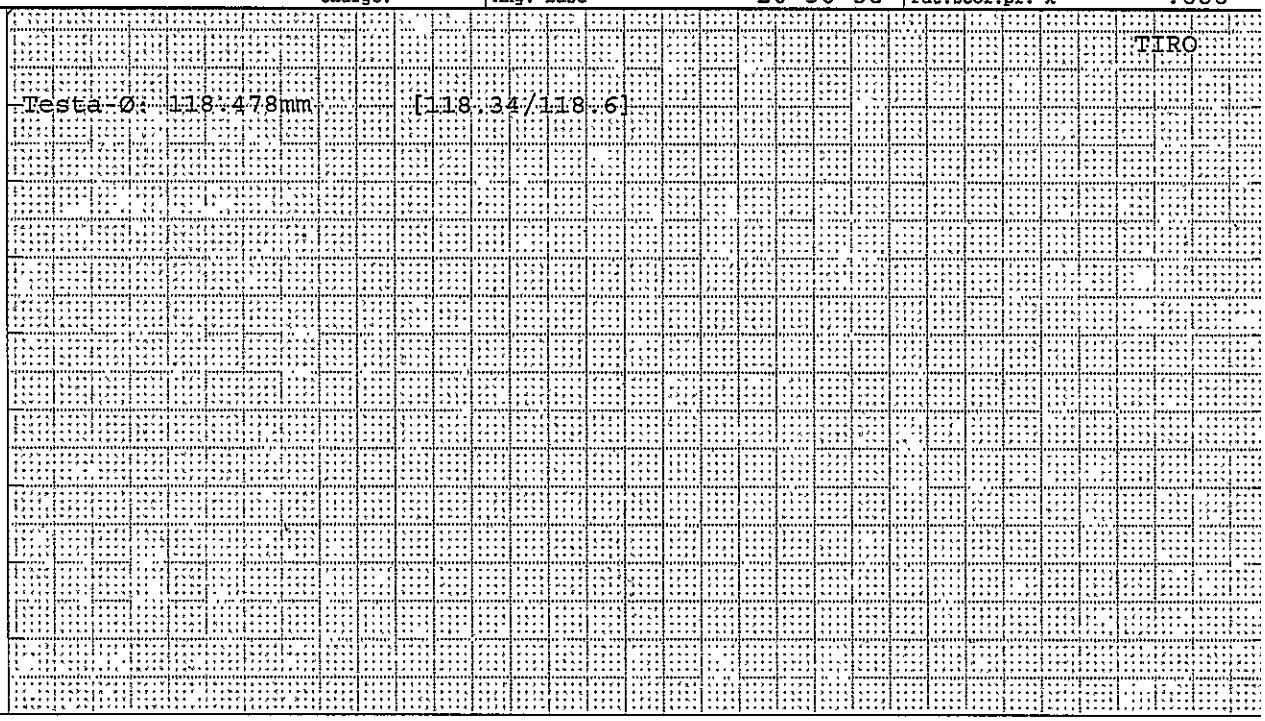

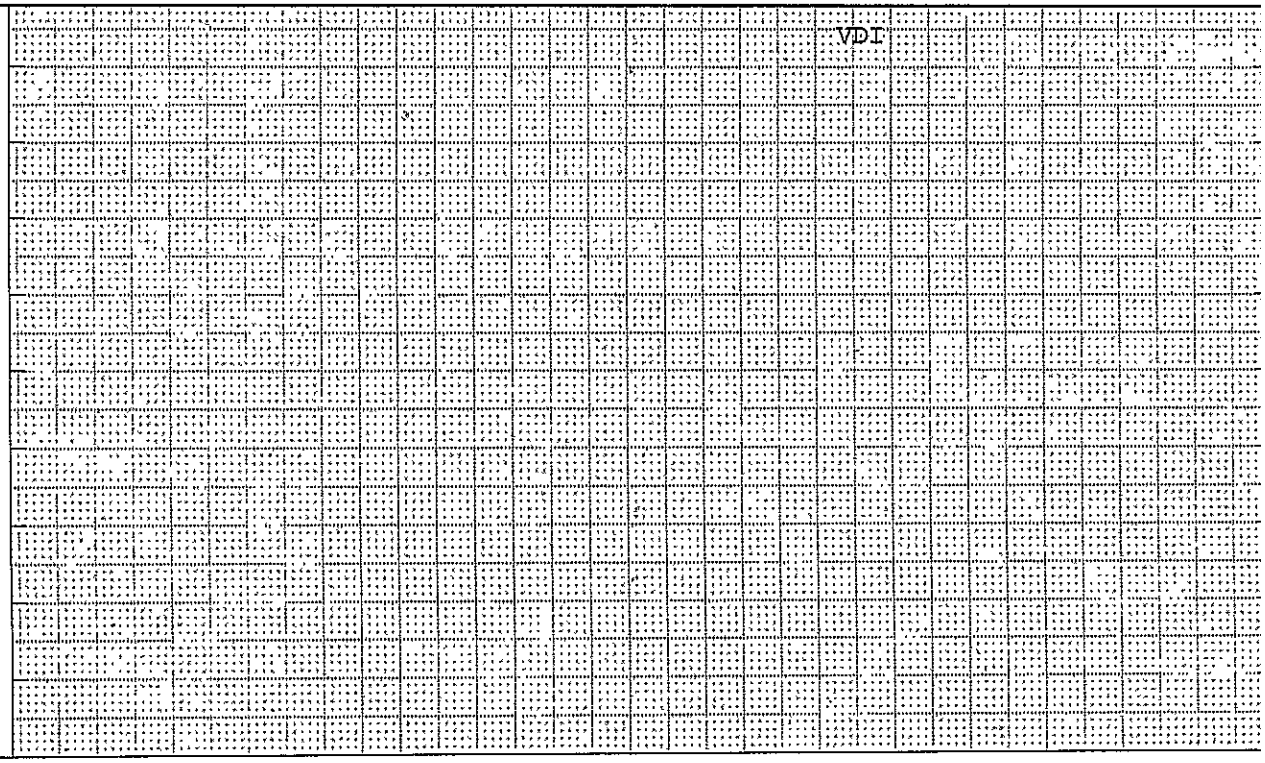

Docum.archiviato elettronicamente.Archiviazione cartacea non necessaria

Copyright (c) Klingelnberg GmbH

KLINGELNBERG

Ruota cilindrica Evolvente/Elica

Nr. prog.: STI0412_06 0	P26 B7681	Controllore:	TURNO B	Data:	24.01.2017 10:17
Denominazione:	ZR2	Numero denti z	51	Largh.fasc.dent. b	17.5mm
Numero disegno.:	250.1.3640.75-IF	Modulo m	2mm	Tratto evolv. La	5.66mm
Commessa/serie nr.:	4	Angolo pressione	20°00'00"	Tratto elica Lß	14mm
Masch.Nr.:	M001 Spindel: Formnest	Angolo elica	-22°00'00"	Inizio elab. M1	19.78mm
Untersuchungszweck:	Laufende Messung	ø Base db	102.403mm	Palpatore ø	(#2C) 1mm
Werkzeug:	Charge:	Ang. Base	-20°36'38"	Fat.scor.pr. x	.888

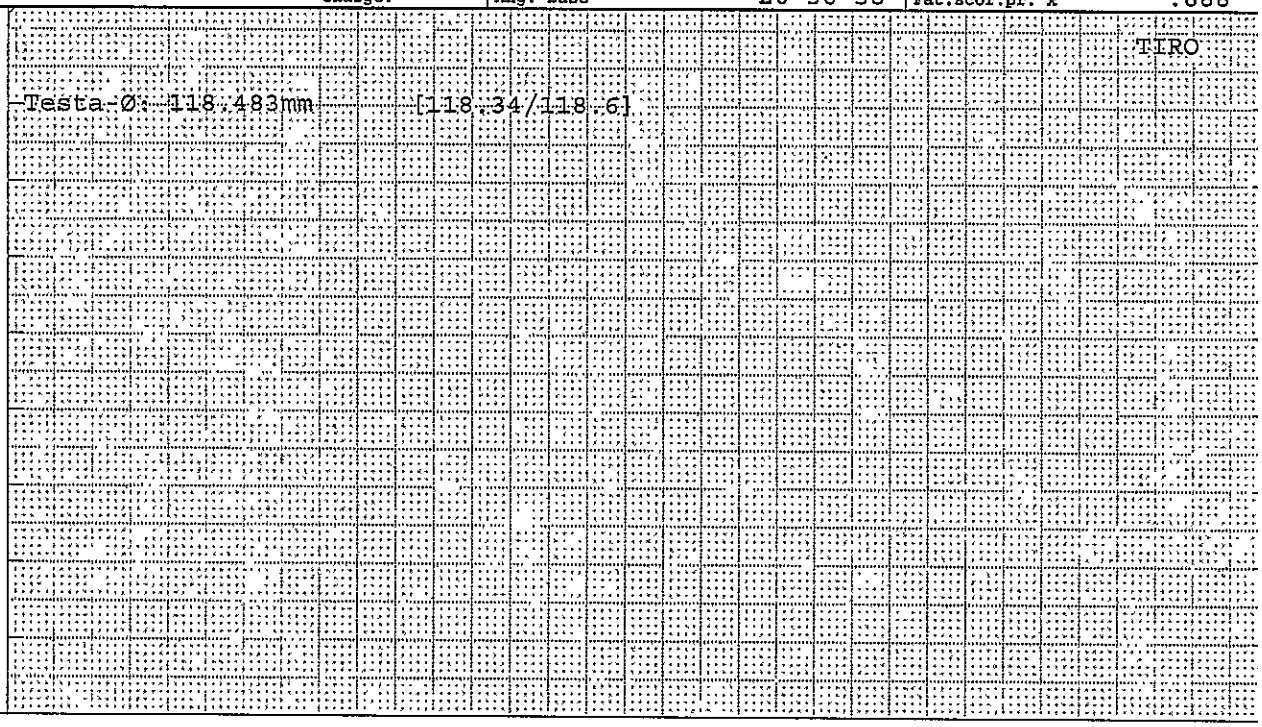

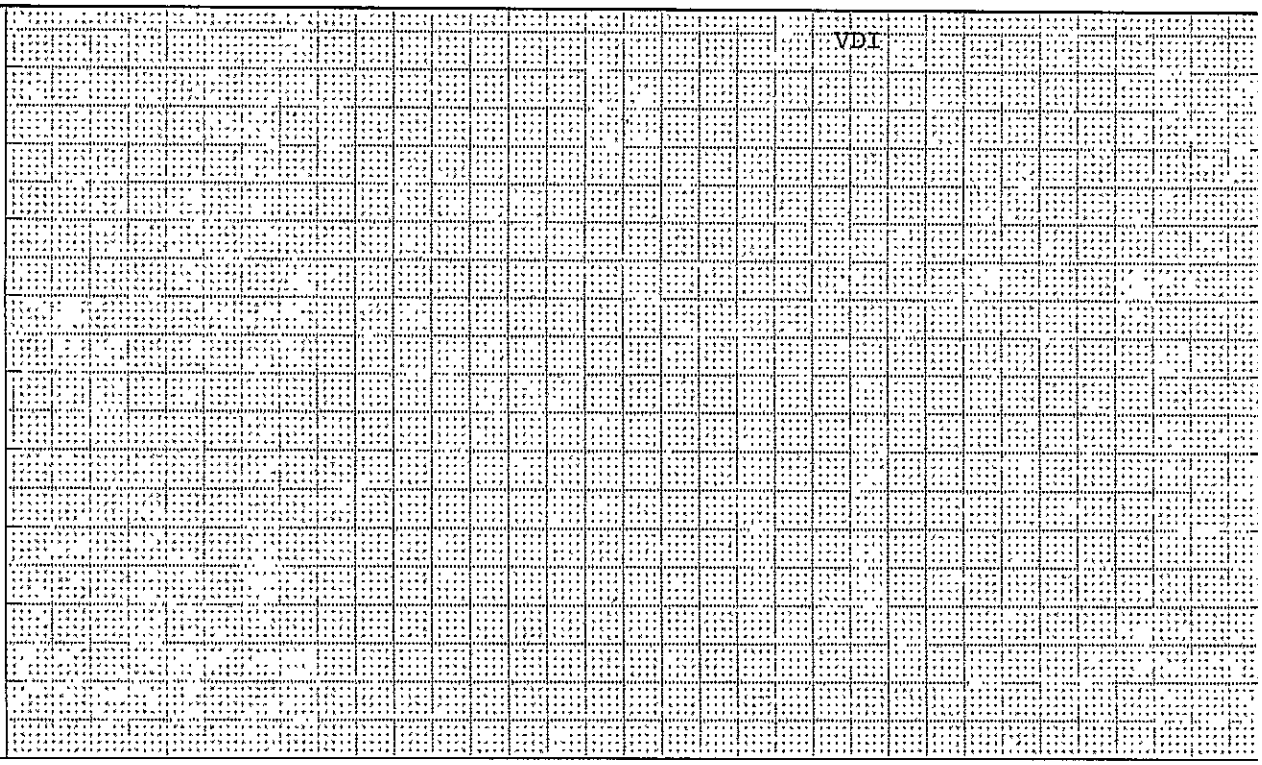

Docum.archiviato elettronicamente.Archiviazione cartacea non necessaria

Copyright (c) Klingelnberg GmbH

KLINGELNBERG

Ruota cilindrica Evolvente/Elica

Nr. prog.: STI0412_06 0	P26 B7681	Controllore:	TURNO B	Data:	24.01.2017 10:21
Denominazione:	ZR2	Numero denti z	51	Largh.fasc.dent. b	17.5mm
Numero disegno.:	250.1.3640.75-IF	Modulo m	2mm	Tratto evolv. La	5.66mm
Commessa/serie nr.:	5	Angolo pressione	20°00'00"	Tratto elica Lß	14mm
Masch.Nr.:	M001 Spindel: Formnest	Angolo elica	-22°00'00"	Inizio elab. M1	19.78mm
Untersuchungszweck:	Laufende Messung	Ø Base db	102.403mm	Palpatore Ø	(#2C) 1mm
Werkzeug:	Charge:	Ang. Base	-20°36'38"	Fat.scor.pr. x	.888

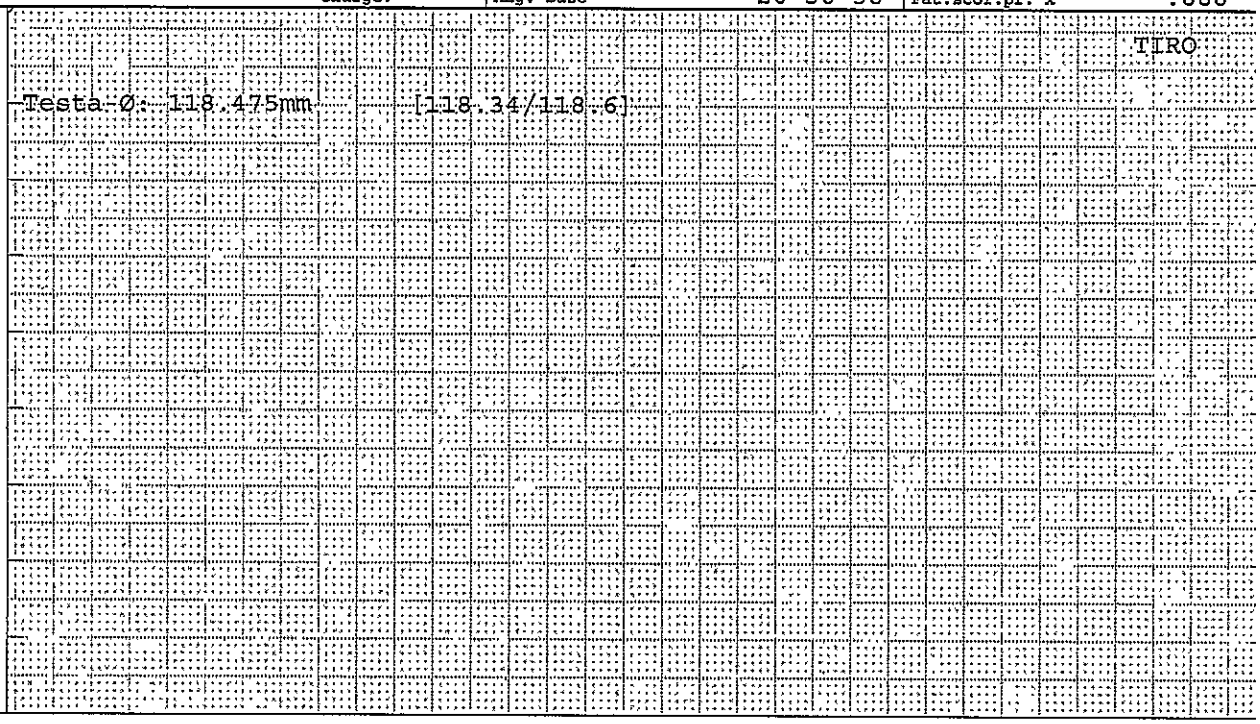

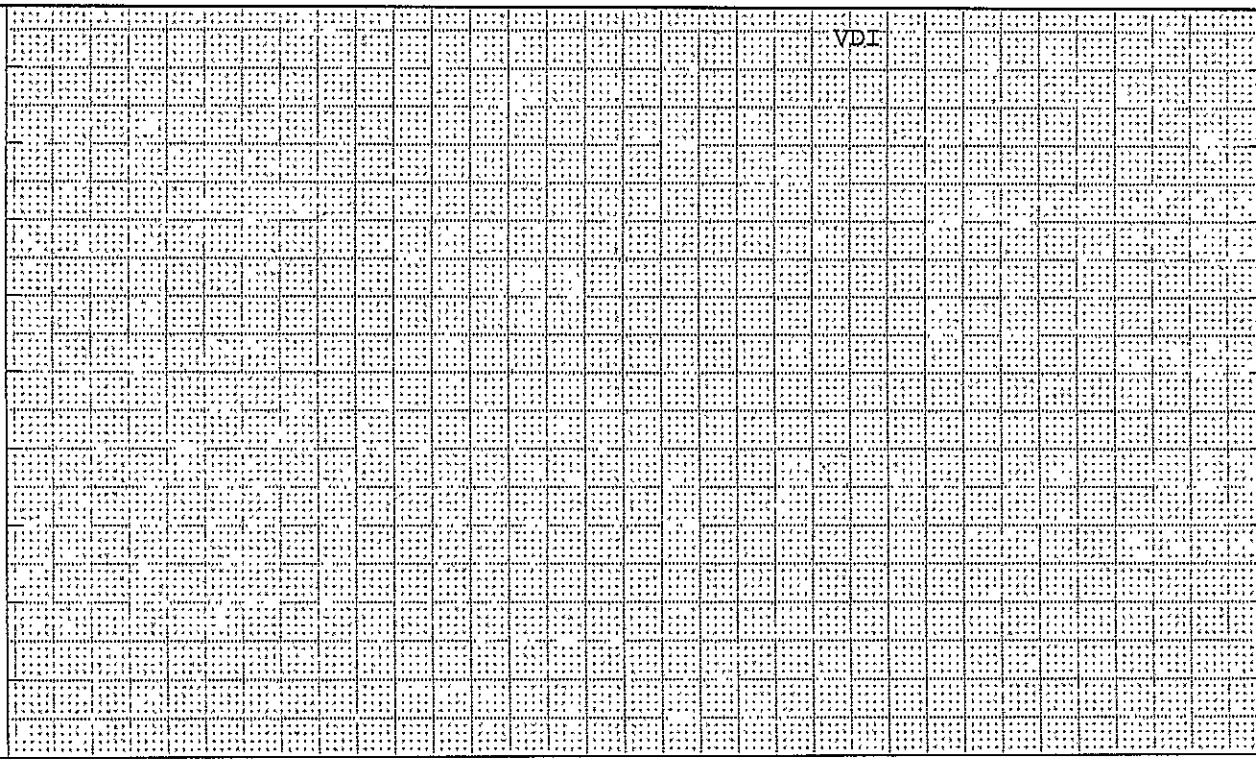

Docum.archiviato elettronicamente.Archiviazione cartacea non necessaria

Copyright (c) Klingelnberg GmbH

KLINGELNBERG

Drawing 3640.75 update from index "a" to "b"					
Short description:	b	1x	007260_HIP_1	VIEW HAIR: Kopfkreis-Ø/TIP DIAMETER Ø118.6-0.26 warM AS Ø118.6-0.2	20170110

	PPAP Requirements	Required	Note for ind. "b"	PPAP Docs updated
1	Design Records	Yes		Yes
2	Authorized Engineering change documents	Yes	see dwg	Yes
3	Customer Engineering approval	n.a.		
4	DFMEA	NO		
5	Process flow diagram(s)	NO		
6	PFMEA	NO	only drawing correction with increased tolerance	
7	Control plan	Yes	Correlation sheet change	Yes
8	Measurement system analysis studies	NO		
9	Dimensional results	Yes		Yes
10	Records of Material / Performance test results	NO		
11	Initial process studies	NO		
12	Qualified laboratory documentation	NO		
13	Appearance Approval Report (A.A.R.)	n.a.		
14	Sample Production Parts	Yes		Yes
15	Master sample	Yes		Yes
16	Checking aids	n.a.		
17	Customer-Specific Requirements	NO		
18	Part Submission Warrant (PSW)	Yes		Yes

	Other requirements			
1	PSW Raw part	NO		
2	PSW E.P. part	NO		
3	PSW Engagement Rings	NO		

GETRAG

Part Submission Warrant

Part Name: Gear 2nd
Customer Part Number: 250.1.4220.75
Shown on Drawing No.: 250.1.4220.75
Organization Part #:
Engineering Change Level: b C007260_MIP_1
Dated: 10-gen-17
Additional Engineering Changes:
Dated:
Safety and/or Government Regulation: ☐ Yes ☑ No
Purchase Order No.:
Weight (kg): 0.6630
Checking Aid No.:
Checking Aid Engineering Change Level:
Dated:

ORGANIZATION MANUFACTURING INFORMATION

GETRAG MODUGNO
Organization Name & Supplier/Vendor Code

VIA DEI CICLAMINI N°4
Street Address

MODUGNO BARI 70026 ITALY
City Region Postal Code Country

CUSTOMER SUBMITTAL INFORMATION

Customer Name/Division

Buyer/Buyer Code

DCT250
Application

MATERIALS REPORTING

Has customer-required Substances of Concern information been reported? ☐ Yes ☐ No ☑ n/a
Submitted by IMDS or other customer format:

Are polymeric parts identified with appropriate ISO marking codes? ☐ Yes ☐ No ☑ n/a

REASON FOR SUBMISSION (Check at least one)

- ☐ Initial Submission
- ☑ Engineering Change(s)
- ☐ Tooling: Transfer, Replacement, Refurbishment, or additional
- ☐ Correction of Discrepancy
- ☐ Tooling Inactive > than 1 year
- ☐ Change to Optional Construction or Material
- ☐ Supplier or Material Source Change
- ☐ Change in Part Processing
- ☐ Parts Produced at Additional Location
- ☐ Other - please specify below

REQUESTED SUBMISSION LEVEL (Check one)

- ☐ Level 1 - Warrant only (and for designated appearance items, an Appearance Approval Report) submitted to customer.
- ☐ Level 2 - Warrant with product samples and limited supporting data submitted to customer.
- ☑ Level 3 - Warrant with product samples and complete supporting data submitted to customer.
- ☐ Level 4 - Warrant and other requirements as defined by customer.
- ☐ Level 5 - Warrant with product samples and complete supporting data reviewed at organization's manufacturing location.

SUBMISSION RESULTS

The results for ☑ dimensional measurements ☐ material and functional tests ☐ appearance criteria ☐ statistical process package
These results meet all drawing and specification requirements: ☑ Yes ☐ NO (If "NO" - Explanation Required)
Mold / Cavity / Production Process

DECLARATION

I hereby affirm that the samples represented by this warrant are representative of our parts which were made by a process that meets all Production Part Approval Process Manual 4th Edition Requirements. I further affirm that these samples were produced at the production rate of 2000 / 24 hours. I also certify that documented evidence of such compliance is on file and available for review. I have noted any deviations from this declaration below.

EXPLANATION / COMMENTS: **Drawing correction with standard Tip diameter tolerance used for topping machining (increased)**

Is each Customer Tool properly tagged and numbered? ☐ Yes ☐ No ☑ n/a

Organization Authorized Signature: Camarda
Date: 24/01/2017
Print Name: Camarda Ettore
Phone No.: tel 390805858220
Fax No.:
Title: Area 1 Manager
E-mail: ettore.camarda@magna.com

FOR CUSTOMER USE ONLY (IF APPLICABLE)

Part Warrant Disposition: ☑ Approved ☐ Rejected ☐ Other
Customer Signature:
Date: 24.01.17
Print Name:
Customer Tracking Number (optional):

GETRAG Production Part Approval

DIMENSIONAL TEST RESULTS

Organization:	GETRAG	Part Number:	250.1.4220.75
Supplier/Vendor Code:	GETRAG Modugno	Part Name:	Gear 2nd
INSPECTION FACILITY:		Design Record Change Level:	10/01/2017
NA		Engineering Change Documents:	b C007260_MIP_1

Organization Measurement Results (Data)

Item	Dimension/Specification	Specification / Limits		Test Date	Qty. Tested	1	2	3	4	5	controllo distruttivo	Ok	Not Ok
1	Diametro di testa	118.800	118.540		5	118.663	118.662	118.679	118.676	118.674		ok	

SIGNATURE	TITLE	DATE
Vicenti D.	ME	24/01/2017

Docum.archiviato elettronicamente.Archiviazione cartacea non necessaria

Ruota cilindrica Evolvente/Elica

Nr. prog.:	STI0412_06 0 P26 B7590	Controllore:	turno B	Data:	24.01.2017 08:08
Denominazione:	ZR2	Numero denti z	52	Largh.fasc.dent. b	17.5mm
Numero disegno.:	250.1.4220.75-IF	Modulo m	2mm	Tratto evolv. La	5.57mm
Commessa/serie nr.:	1	Angolo pressione	20°	Tratto elica LB	14mm
Masch.Nr.:	M001 Spindel: Formmaschine	Angolo elica	-22°	Inizio elab. M1	17.58mm
Untersuchungszweck:	Laufende Messung	Ø Base db	104.4109mm	Palpatore Ø	(#2C)1mm
Werkzeug:	Charge:	Ang. Base	-20.611°	Fat.scor.pr. x	.275

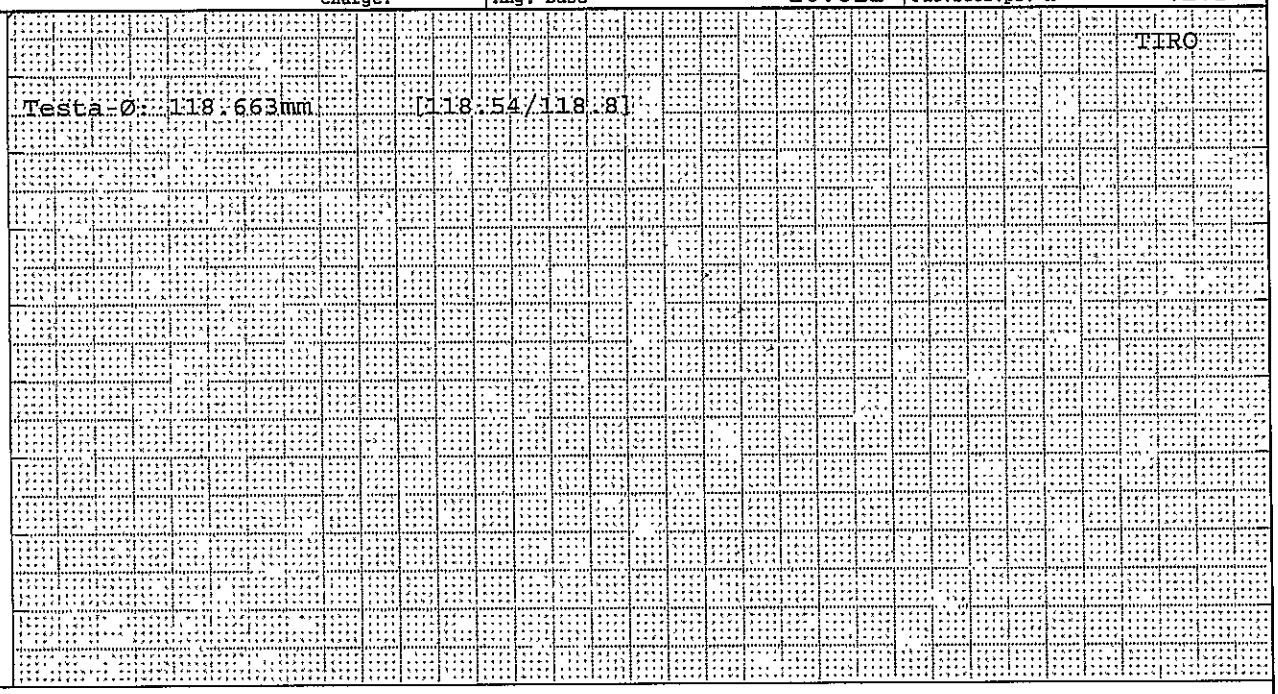

Copyright (c) Klingelnberg GmbH

Ruota cilindrica Evolvente/Elica

Nr. prog.: STI0412_06 0	P26 B7590	Controllore:	turno B	Data:	24.01.2017 08:14
Denominazione:	ZR2	Numero denti z	52	Largh.fasc.dent. b	17.5mm
Numero disegno.:	250.1.4220.75-IF	Modulo m	2mm	Tratto evolv. La	5.57mm
Commessa/serie nr.:	2	Angolo pressione	20°	Tratto elica LS	14mm
Masch.Nr.:	M001 Spindel: Formnest	Angolo elica	-22°	Inizio elab. M1	17.58mm
Untersuchungszweck:	Laufende Messung	ø Base db	104.4109mm	Palpatore ø	(#2C)1mm
Werkzeug:	Charge:	Ang. Base	-20.611°	Fat.scor.pr. x	.275

TIRO

Testa-Ø: 118.662mm [118.54/118.8]

VDI

Docum.archiviato elettronicamente.Archiviazione cartacea non necessaria

Copyright (c) Klingelnberg GmbH

Ruota cilindrica Evolvente/Elica

Nr. prog.: STI0412_06 0	P26 B7590	Controllore:	turno B	Data:	24.01.2017 08:19
Denominazione:	ZR2	Numero denti z	52	Largh.fasc.dent. b	17.5mm
Numero disegno.:	250.1.4220.75-IF	Modulo m	2mm	Tratto evolv. La	5.57mm
Commessa/serie nr.:	3	Angolo pressione	20°	Tratto elica LB	14mm
Masch.Nr.:	M001 Spindel: Formmaschine	Angolo elica	-22°	Inizio elab. M1	17.58mm
Untersuchungszweck:	Laufende Messung	Ø Base db	104.4109mm	Palpatore Ø	(#2C) 1mm
Werkzeug:	Charge:	Ang. Base	-20.611°	Fat.scor.pr. x	.275

TIRO

Testa-Ø: 118.679mm [118.54/118.8]

VDI

Docum.archiviato elettronicamente.Archiviazione cartacea non necessaria

Copyright (c) Klingelnberg GmbH

KLINGELNBERG

Ruota cilindrica Evolvente/Elica

Nr. prog.:	STI0412_06 0 P26 B7590	Controllore:	turno B	Data:	24.01.2017 08:21
Denominazione:	ZR2	Numero denti z	52	Largh.fasc.dent. b	17.5mm
Numero disegno.:	250.1.4220.75-IF	Modulo m	2mm	Tratto evolv. La	5.57mm
Commessa/serie nr.:	4	Angolo pressione	20°	Tratto elica Lß	14mm
Masch.Nr.:	M001 Spindel: Formmast	Angolo elica	-22°	Inizio elab. M1	17.58mm
Untersuchungszweck:	Laufende Messung	ø Base db	104.4109mm	Palpatore ø	(#2C)1mm
Werkzeug:	Charge:	Ang. Base	-20.611°	Fat.scor.pr. x	.275

TIRO

Testa-Ø: 118.676mm [118.54/118.8]

VDI

Docum.archiviato elettronicamente.Archiviazione cartacea non necessaria

Copyright (c) Klingelnberg GmbH

KLINGELNBERG

Ruota cilindrica Evolvente/Elica

Nr. prog.: STI0412_06 0	P26 B7590	Controllore:	turno B	Data:	24.01.2017 08:34
Denominazione:	ZR2	Numero denti z	52	Largh.fasc.dent. b	17.5mm
Numero disegno.:	250.1.4220.75-IF	Modulo m	2mm	Tratto evolv. La	5.57mm
Commessa/serie nr.:	5	Angolo pressione	20°	Tratto elica Lß	14mm
Masch.Nr.:	M001 Spindel: Formmaschine	Angolo elica	-22°	Inizio elab. M1	17.58mm
Untersuchungszweck:	Laufende Messung	ø Base db	104.4109mm	Palpatore ø	(#2C)1mm
Werkzeug:	Charge:	Ang. Base	-20.611°	Fat.scor.pr. x	.275

TIRO

Testa-Ø: 118.674mm [118.54/118.8]

VDI

Docum.archiviato elettronicamente.Archiviazione cartacea non necessaria

Copyright (c) Klingelnberg GmbH

KLINGELNBERG

Drawing 4220.75 update from index "a" to "b"					
Short description:	b	1x	007260_HIP_1	VIEW NAME Kolbenfeis-Ø/TIP DIAMETER Ø118.8-0.26 war/WAS Ø118.8-0.2	20170110

	PPAP Requirements	Required	Note for ind. "b"	PPAP Docs updated
1	Design Records	Yes		Yes
2	Authorized Engineering change documents	Yes	see dwg	Yes
3	Customer Engineering approval	n.a.		
4	DFMEA	NO		
5	Process flow diagram(s)	NO		
6	PFMEA	NO	only drawing correction with increased tolerance	
7	Control plan	Yes	Correlation sheet change	Yes
8	Measurement system analysis studies	NO		
9	Dimensional results	Yes		Yes
10	Records of Material / Performance test results	NO		
11	Initial process studies	NO		
12	Qualified laboratory documentation	NO		
13	Appearance Approval Report (A.A.R.)	n.a.		
14	Sample Production Parts	Yes		Yes
15	Master sample	Yes		Yes
16	Checking aids	n.a.		
17	Customer-Specific Requirements	NO		
18	Part Submission Warrant (PSW)	Yes		Yes

	Other requirements			
1	PSW Raw part	NO		
2	PSW E.P. part	NO		
3	PSW Engagement Rings	NO		

Released by Fabrizio.Cricenti on 2017-03-08
Document Status: approved

STIRNRAD / GEAR	außenverzahnt / external	Toleranzen der Verzahnung (DIN 3961 vom Aug. 1978) gültig für Werte am Einzelzahn / Tolerances of gearing (DIN 3961 of Aug. 1978) valid for values at individual tooth (7)				
Zähnezahl z / Number of teeth	51		linke Fl. / left flank	rechte Fl. / right flank		
Modul m_n / Normal module	2.000000	Profil-Formabweichung $f_{f\alpha}$ / Profile form error	# 0.005		Eingriffsteilungs-Abweich. f_{pe} / Normal pitch error	0.010
Eingriffswinkel α_n / Normal pressure angle	20° 0' 0"	Profil-Gesamtabweichung F_α / Total profile error			Teilungs-Einzelabweichung f_p / Adjacent pitch error	0.010
Schrägungswinkel β / Helix angle	22° 0' 0"	Profil-Winkelabweichung $f_{H\alpha}$ / Profile angle error	0.000 ± 0.007	0.000 ± 0.007	Teilungssprung f_u / Diff. bet. adjacent pitches	0.012
Steigungsrichtung / Hand of helix	LEFT	Flankenl.-Winkelabweich. $f_{H\beta}$ / Tooth alignment error	- 0.010 ± 0.013	0.022 ± 0.013	Teilungs-Summenabweich. F_{pk} / Cumulative circ. pitch error	
Profilverschiebungsfaktor x / Addendum modification coeff.	0.888	Flankenl.-Gesamtabweich. F_β / Total alignment error			Rundlaufabweichung F_r / Radial run-out (a)	0.032
Teilkreisdurchmesser (1) d / Pitch diameter	110.011	Flankenl.-Formabweich. $f_{f\beta}$ / Longitudinal alignment err.	# 0.005		Zahndickenschwankung R_s / Range of tooth thickn. error	
Kopfkreisdurchmesser d_a (b) / Outside diameter	118.60 -0.26	Teilungs-Gesamtabweich. F_p / Cumulative pitch error	0.050 (a)			
Kopfnutzkreisd. theo. max. d_{Na} / Tip diam. usable theo.	118.35	Einf.-Wälzabweichung $F_{i'}$ / Tangential composite error			Zweifl.-Wälzabweichung $F_{i''}$ / Radial composite error	0.028
Kopfnutzkreisd. theo. min. d_{Na} / Tip diam. usable theo.	117.95	Einflanken-Wälzsprung $f_{i'}$ / Tang. tooth to tooth comp. err.			Zweifl.-Wälzsprung $f_{i''}$ / Radial tooth to tooth comp. err.	0.012
Fußkreisdurchmesser d_f / Root diameter	107.75 -0.30	Radbreite im Meßkreis d_M b / Facewidth in meas. diam.	17.50		Meßkreis Krümmungsradius ρ_{dM} / Radius of curvature meas. diam.	24.44
Fußnutzkreisdurchmesser d_{Nf} / Root diameter usable	109.78					
Grundkreisradius r_b / Base circle radius	51.202					
Grundkreisdurchmesser d_b / Base diameter	102.403					
Normalzahndicke max. s_n / Normal tooth thickness	4.357					
Normalzahndicke min. s_n / Normal tooth thickness	4.332					
Meßzähnezahl k / Number of teeth spanned						
Zahnweite max. W_k / Base tangent length						
Zahnweite min. W_k / Base tangent length		vor dem Aufpressen / before pressing				
Meßkugeldurchmesser D_M / Ball diameter	3.5000	geschliffen / ground	gehont / honed			
Diam. Zweikugelmaß max. M_{dK} / Measurement o. balls	117.880	s_n =				
Diam. Zweikugelmaß min. M_{dK} / Measurement o. balls	117.824	W_k =				
Verdrehflankenspiel theo. / Circumferential backlash	0.063 / 0.171	M_{dK} =				

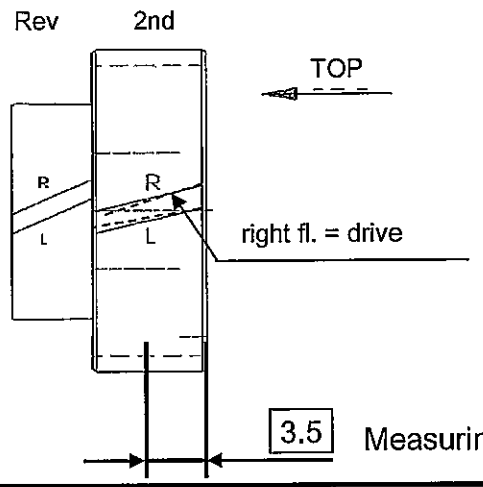

Measuring plane for MdK

Für fp max. zwei Wellen zulässig
For fp max. two waves allowed

Bezugsprofil-Schleifscheibe
Grinding tool data

Schleifscheibenkopfhöhe h_{aP0S} = 2.800
Grinding wheel tip height

Schleifscheibenkopfradius ρ_{aP0S} = 0.787
Grinding wheel tip radius

Schleifdurchmesser = 108.83 $_{-0.30}$ ≡ 18.42
grinding diameter

Hondurchmesser = 108.83 $_{-0.30}$ ≡ 18.42
honing diameter

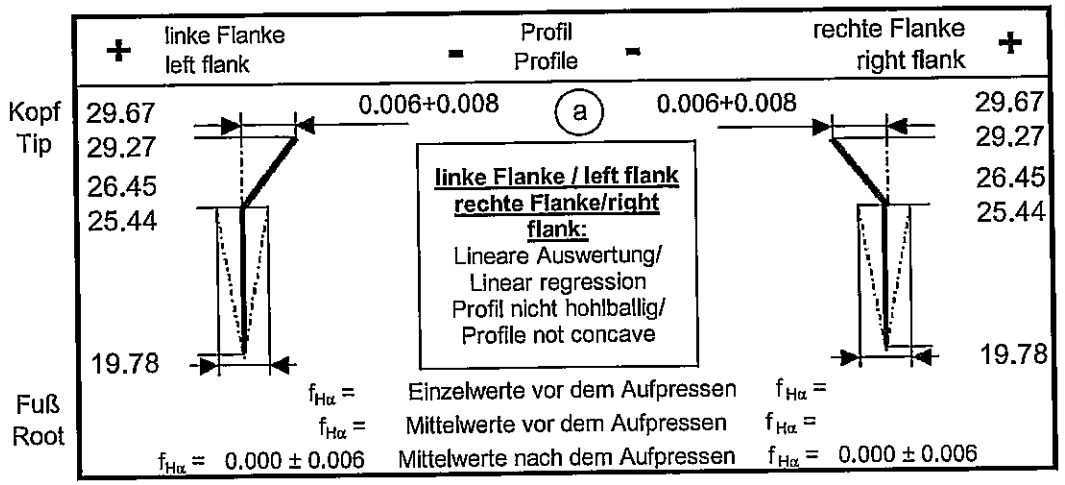

* Schreibbeginn
* Start of checking

Ø = 108.83 $_{-0.30}$ ≡ 18.42

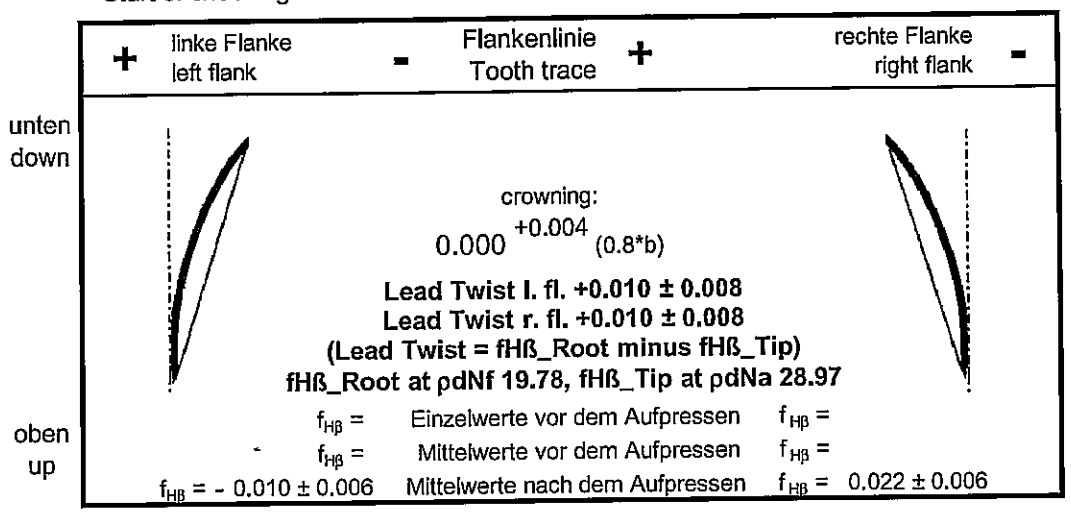

* ffαf (zwischen dNf und dem Schreibbeginn ds) max ffα/2, jedoch 0.003 zulässig
* ffαf (between dNf and start of checking ds) max ffα/2, 0.003 allowable.

Profil- und Flankenlinienprüfung nach VDI/VDE 2612
Tabellenwerte für F_β und $f_{H\beta}$ sind auf die gesamte Radbreite im Meßkreis d_M bezogen
Flankenlinienprüfbereich Lβ = 0.8*b hochgerechnet auf 1.0*b
Begriffe für Stirnräder nach DIN 868, 3960, 3998

Profile and helix checking according to VDI/VDE 2612
Listed tolerance data for F_β and $f_{H\beta}$ refers to the total face width in the meas. dia. d_M
Tooth trace testing area Lβ = 0.8*b calculated to 1.0*b
Terms of the tooth system according to DIN (German Industrial Standards) No. 868, 3960, 3998

Vorbearbeitungsdaten siehe Verzahnungsblatt Vorbearbeitung gleicher Nr.
For pre-machining dimensions, see gear data sheet same number

Wkz-Profil siehe Werkzeugdatenblatt Nr. 250.1.3640.75
For Tooth profile, see tool data sheet number

 # Der Verlauf der Profil- und Flankenlinie muss über den Messbereich stetig sein (ein- oder mehrfache Richtungsänderungen sind nicht zulässig)
 # The form of the profile and helix has to be continuous (one or more changes of directions are not allowed)

Buch.	Anz.	Änd.Nr.		Datum	Name
b	1	C007260	See CO	20170308	Cricenti
a	3	35392	See CR	13.05.2011	Cricenti

Verteiler:

Schutzvermerk nach ISO 16016 beachten
Protection per ISO 16016

GETRAG
GETRAG Getriebe- und Zahnradfabrik Hermann Hagenmeyer GmbH & Cie KG

Abbildungen sind unmaßstäblich.
Diagrams not to scale.

Ersatz für
Erstverwendung bei Getriebetype: 250.0.0003.10

Remark:

	Datum	Name
gez.	2011-03-23	Paaßen, Holger
gepr.		

Verzahnungsblatt Endkontrolle
Final Check Gear Data

Benennung:
Naming:
Gear 2nd

Zeichnungsnummer:
Drawing number:
250.1.3640.75

Design Release:	2017-01-10	Agapi.Raidt
Function Release:	2017-01-16	Michael.Gierlatta
Geardata Release:	2017-01-17	Fabrizio Ciccenti
Material Release:	2017-01-10	Agapi.Raidt
SAP Release:	2017-01-28	Hartmut.Kobold
Document Status:	approved	

Fuer Freigabeinformationen freihalten! KEEP FREE FOR RELEASE INFORMATION!

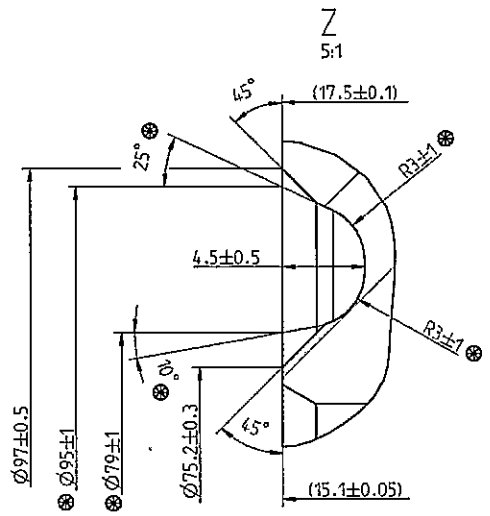

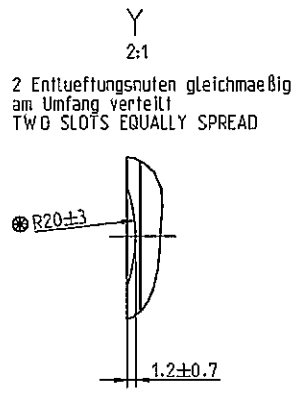

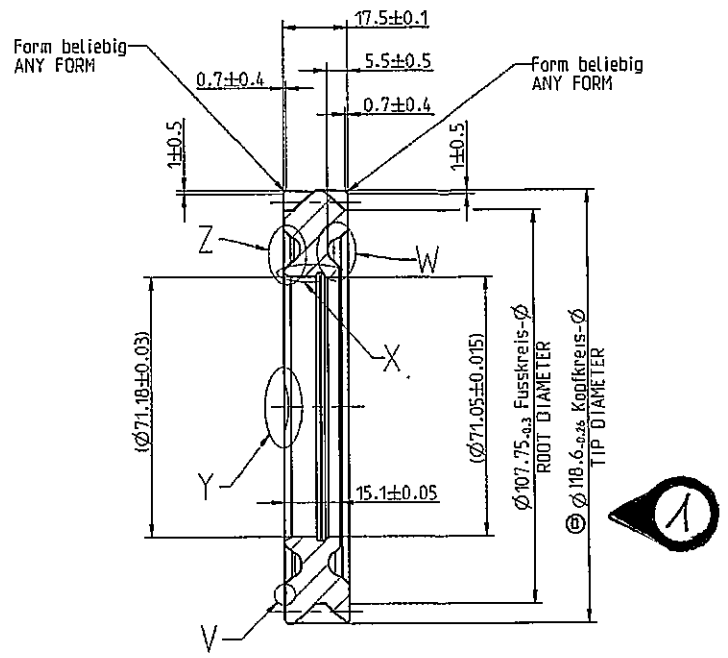

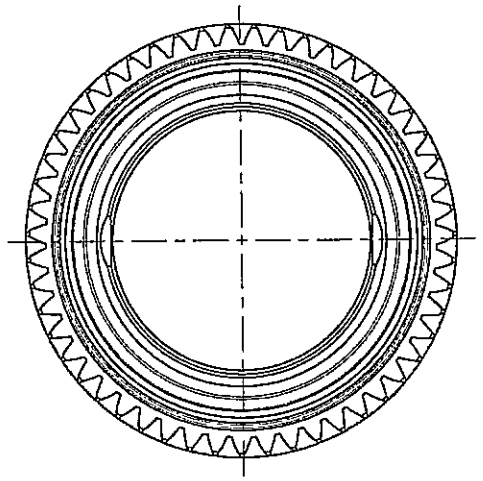

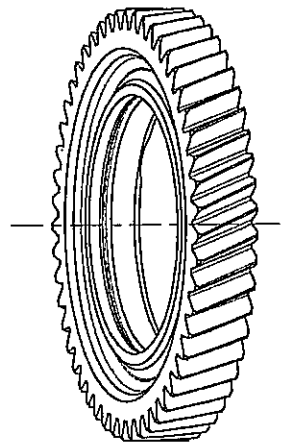

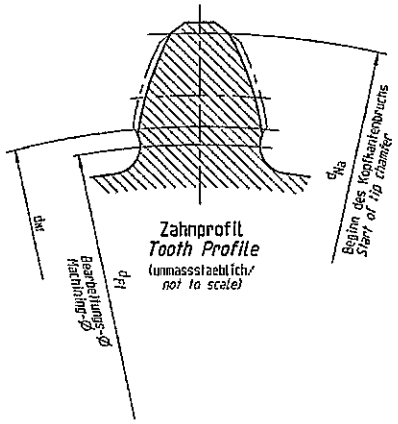

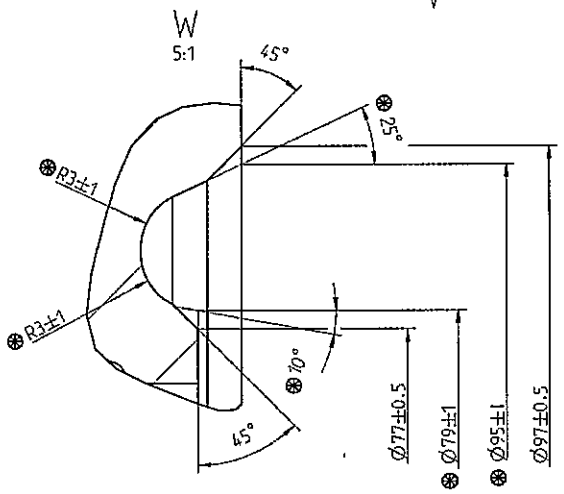

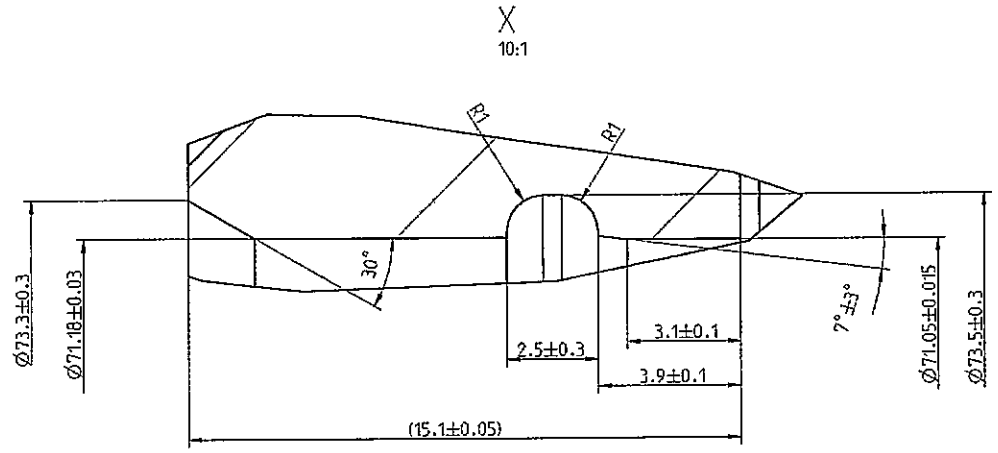

vorbearbeitet, Fertigmass ▲ (...)
siehe 250.1.3638.75 und 250.1.3677.75
PREMACHINED, FINISHED DIMENSION ▲ (...)
SEE 250.1.3638.75 AND 250.1.3677.75

Kanten an Laufverzahnungen \ *Tooth chamfers*
unmassstaeblich \ *not to scale*

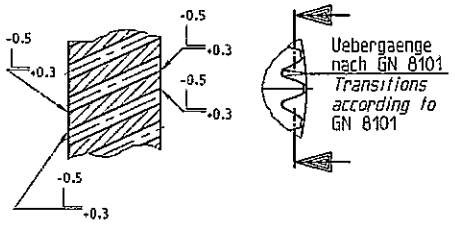

Optionale Erkennungsrille/OPTIONAL ID GROOVE
10:1

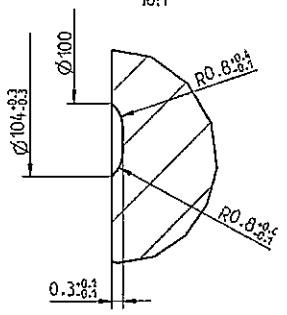

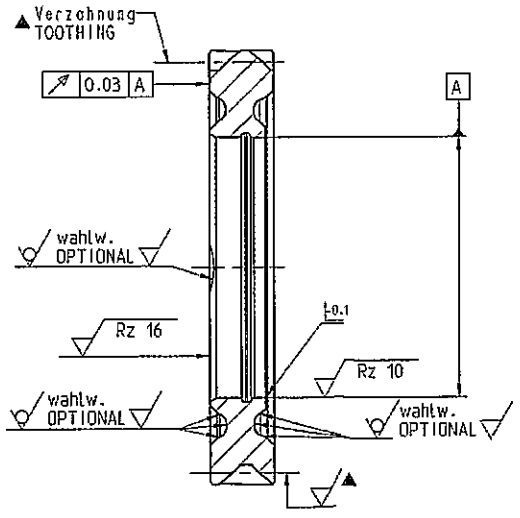

Naehere Angaben zur Verzahnung (nach dem Schweißen)
siehe Verzahnungsblatt gleicher Nummer
FURTHER GEAR DATA (AFTER WELDING) SEE
DATA SHEET SAME NUMBER

Rz 40

Rohteilgeometrie, keine Pruefmaße
RAW PART GEOMETRY, AS REFERENCE ONLY

Rohteilnummer/RAW PART NUMBER
250.1.4220.90 und/AND 250.1.4220.91

Haerteangaben siehe
Doppelrad 2./Rw. vst.
250.1.3638.75 und 250.1.3677.75
HEAT TREATMENT SEE
DOUBLE GEAR 2ND/REV CPL.
250.1.3638.75 AND 250.1.3677.75

Aussenverzahnung / EXTERNAL GEAR		
Zahnwelle/ SPLINE DATA EXTERNAL		
Bezugsdurchmesser / REFERENCE DIAMETER d_B		
Modul / NORMAL MODULE m_n		2.000
Zaehnezahl / NUMBER OF TEETH z		51
Eingriffswinkel / NORMAL PRESSURE ANGLE α_n		20.0°
Schraegungswinkel / HELIX ANGLE β		22.0°
Richtung / HAND OF HELIX		LEFT, links
Bezugsprofil / BASIC RACK		
Profilverschiebung/ADDENDUM MODIFICATION $x \times m_n$	Nennmass / NOMINAL	1.776
Qualitaet / GEAR TOOTH QUALITY (DIN3961)		7
Toleranzklasse / TOLERANCE CLASS		
Zahndicke / TOOTH THICKNESS s_n (Lehrenmass / GAGE DIMENSION)	effective max.	
Zahndicke / TOOTH THICKNESS s_n (Einzelmessung / ACTUAL)	max.	4.357
	min.	4.332
Messkugel-Ø / BALL DIA D_M		3.50
Pruefmass / MEASUREMENT OVER BALLS M_{DK} (Einzelmessung / ACTUAL)	max.	117.880
	min.	117.824

GC6/TS 803001	0	<M>					
	0	▽					
GN 3010	0	<M>					
	0	<C>					
	0	<A>	b	1x	0072260-MIP-1	VIEW MAIN Kopfkreis-Ø/TIP DIAMETER Ø118.6-0.36 was/ist Ø118.6-0.2	20170110
CAD Proe Explorer			a	1x	0009911-MIP-1	Aufnahme V. Optionale Erkennungsrille hinzu/ VIEW V. OPTIONAL ID GROOVE ADDED	20160419
			--	--	35387	Spezifikationsniveau F erfüllt SPECIFICATION MATURITY LEVEL F APPROVED	20110316
Massstab / SCALE M: 1:1 (--)			Buchst. CHANGE INDEX	Anzahl NUMBER	Aend.-Nr. CHANGE REQUEST NO.	Aenderung MODIFICATION	Datum DATE

--nur mittels CAD zulaessig FREA ueberpruefen--
--ONLY ALLOWED BY CAD/CHECK FREA--

Informationen auf dieser Zeichnung sind ohne Angaben zu Verwendung und Freigabe unverbindlich.
INFORMATION ON THIS DRAWING PROVIDED WITHOUT OBLIGATION IF USAGE AND RELEASE ARE NOT SHOWN.

Allgemeintoleranzen fuer Laengenmasse, Form und Lage ISO 2768 - mK gebrochene Kanten, Radien und Winkelmasse ISO 2768 - f
GENERAL TOLERANCES FOR LINEAR DIMENSIONS, FORM AND POSITION ISO 2768 - mK, CHAMFERS, RADII AND ANGULAR DIMENSIONS ISO 2768 - f

Auswertung der Durchmessermessung erfolgt nach der Gauss-Methode (Arithmetischer Mittelwert)
EVALUATION OF THE DIAMETER MEASUREMENT IS CARRIED OUT ACCORDING TO THE GAUSS METHOD (ARITHMETICAL MEAN VALUE)

Form- und Lageintoleranz FORM AND POSITION TOLERANCES EN ISO 1101	Toleranzen TOLERANCING ISO 8015	Oberflaechenangaben SURFACE TEXTURE GN 4005	Verfahrensfehlerkanten BREAK EDGES ISO 13715

Werkstoff / MATERIAL: GC6805000-02_20MnCrS5
Halbzeug: SEMI-FINISHED: -
Oelbenetzte Oberflaeche OIL WETTED SURFACE: 0 mm²
Gesamtoberflaeche SURFACE AREA: 30888 mm²
Masse MASS: 0.665 kg

Benennung / ITEM NAME: GEAR 2ND
Zahnrad 2. Gang

Ersatz fuer SUBSTITUTE FOR: -

Artikel-Nr./ ITEM NO.: 2501364075
CAD-Modell: 2501364075

GETRAG
Getriebe- und Zahnradwerk Hermann Hagenmeyer GmbH & Cie KG
Schutzvermerk nach ISO 16016 beachten
PROTECTION PER ISO 16016

Blatt/SHEET 1 von/OF 1 | Reifegrad MATURITY: F | Format SIZE: A1

UNBEARB. DATA			
CHECKED BY		LOCKED IN CAD ag am/vom Ähnlichkeit	VERSION
Zeichn / DRW:	Agapi.Raidt	30.01.2017 10:00:00	4
Model:	Agapi.Raidt	30.01.2017 10:00:00	34

Document Revision: 20170110100032, printed on 2017-07-10 at 15:41 by Mirko.Vicenti

Released by Fabrizio.Cricenti on 2017-01-17
Document Status: approved

STIRNRAD / GEAR	außenverzahnt / external	Toleranzen der Verzahnung (DIN 3961 vom Aug. 1978) gültig für Werte am Einzelzahn / Tolerances of gearing (DIN 3961 of Aug. 1978) valid for values at individual tooth (7)				
			linke Fl. / left flank	rechte Fl. / right flank		
Zähnezahl / Number of teeth z	52					
Modul / Normal module m_n	2.000000	Profil-Formabweichung / Profile form error $f_{f\alpha}$	# 0.005		Eingriffsteilungs-Abweich. / Normal pitch error f_{pe}	0.010
Eingriffswinkel / Normal pressure angle α_n	20° 0' 0"	Profil-Gesamtabweichung / Total profile error F_α			Teilungs-Einzelabweichung / Adjacent pitch error f_p	0.010
Schrägungswinkel / Helix angle β	22° 0' 0"	Profil-Winkelabweichung / Profile angle error $f_{H\alpha}$ (b)	0.000 ± 0.007	0.012 ± 0.007	Teilungssprung / Diff. bet. adjacent pitches f_u	0.012
Steigungsrichtung / Hand of helix	LEFT	Flankenl.-Winkelabweich. / Tooth alignment error $f_{H\beta}$ (a)	0.000 ± 0.013	+ 0.022 ± 0.013	Teilungs-Summenabweich. / Cumulative circ. pitch error F_{pk}	
Profilverschiebungsfaktor / Addendum modification coeff. x	0.275	Flankenl.-Gesamtabweich. / Total alignment error F_β			Rundlaufabweichung / Radial run-out F_r (a)	0.032
Teilkreisdurchmesser / Pitch diameter d	112.168	Flankenl.-Formabweich. / Longitudinal alignment err. $f_{f\beta}$	# 0.005		Zahndickenschwankung / Range of tooth thickn. error R_s	
Kopfkreisdurchmesser / Outside diameter d_a (d)	118.80 $_{-0.26}$	Teilungs-Gesamtabweich. / Cumulative pitch error F_p	(a) 0.050			
Kopfnutzkreisd. theo. max. / Tip diam. usable theo. d_{Na}	118.40	Einf.-Wälzabweichung / Tangential composite error $F_{i'}$			Zweifl.-Wälzabweichung / Radial composite error $F_{i''}$	0.028
Kopfnutzkreisd. theo. min. / Tip diam. usable theo. d_{Na}	118.00	Einflanken-Wälzsprung / Tang. tooth to tooth comp. err. $f_{i'}$			Zweifl.-Wälzsprung / Radial tooth to tooth comp. err. $f_{i''}$	0.012
Fußkreisdurchmesser / Root diameter d_f	107.42 $_{-0.30}$	Radbreite im Meßkreis / Facewidth in meas. diam. d_M b	17.50		Meßkreis Krümmungsradius / Radius of curvature meas. diam. ρ_{dM}	21.95
Fußnutzkreisdurchmesser / Root diameter usable d_{Nf}	110.17					
Grundkreisradius / Base circle radius r_b	52.205					
Grundkreisdurchmesser / Base diameter d_b	104.411					
Normalzahndicke max. / Normal tooth thickness s_n	3.464					
Normalzahndicke min. / Normal tooth thickness s_n	3.439					
Meßzähnezahl / Number of teeth spanned k						
Zahnweite max. / Base tangent length W_k						
Zahnweite min. / Base tangent length W_k		vor dem Aufpressen / before pressing				
Meßkugeldurchmesser / Ball diameter D_M	3.5000	geschliffen / ground		gehont / honed		
Diam. Zweikugelmaß max. / Measurement o. balls M_{dK}	118.006	s_n =				
Diam. Zweikugelmaß min. / Measurement o. balls M_{dK}	117.945	W_k =				
Verdrehflankenspiel theo. / Circumferential backlash	0.064 / 0.168	M_{dK} =				

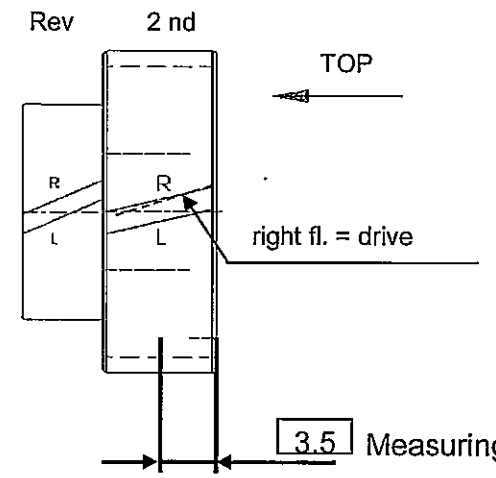

Für fp max. zwei Wellen zulässig
For fp max. two waves allowed

Bezugsprofil-Schleifscheibe
Grinding tool data

Schleifscheibenkopfhöhe / Grinding wheel tip height h_{aP0S} = 2.800

Schleifscheibenkopfradius / Grinding wheel tip radius ρ_{aP0S} = 0.787

Schleifdurchmesser / grinding diameter = 108.90 $_{-0.30}$ ≡ 15.47

Hondurchmesser / honing diameter = 108.90 $_{-0.30}$ ≡ 15.47

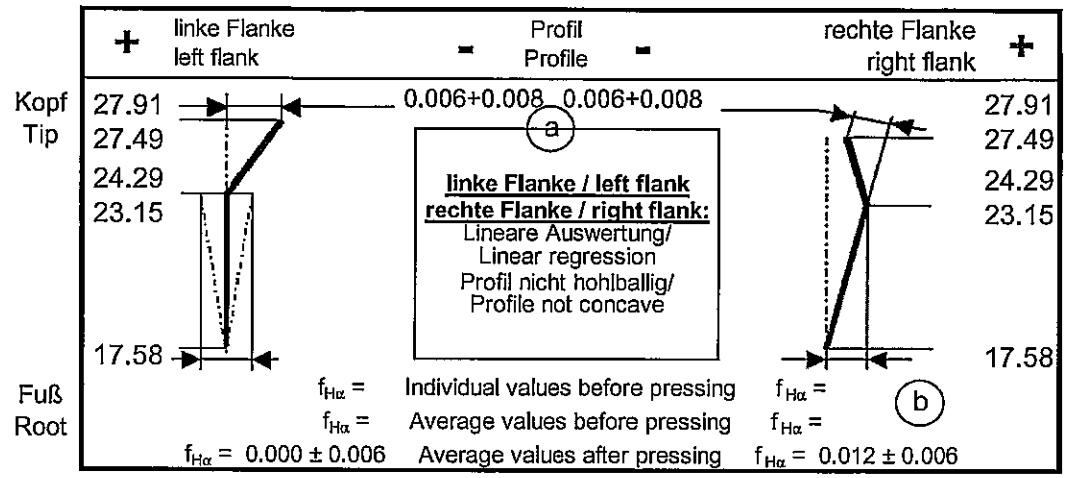

* Schreibbeginn
* Start of checking

Ø = 108.90 $_{-0.30}$ ≡ 15.47

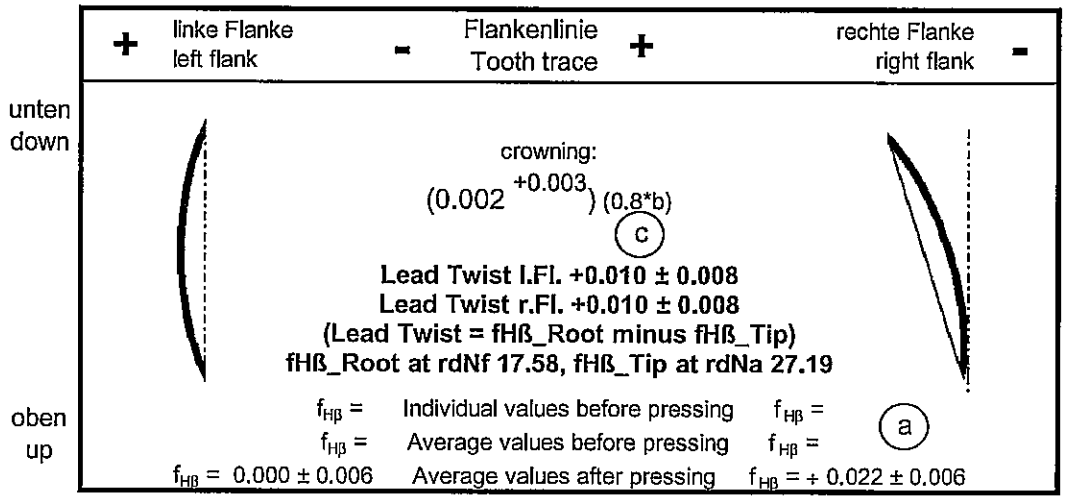

* ffαf (zwischen dNf und dem Schreibbeginn ds) max ffα/2, jedoch 0.003 zulässig
* ffαf (between dNf and start of checking ds) max ffα/2, 0.003 allowable.

Profil- und Flankenlinienprüfung nach VDI/VDE 2612
Tabellenwerte für F_β und $f_{H\beta}$ sind auf die gesamte Radbreite im Meßkreis d_M bezogen
Flankenlinienprüfbereich Lβ = 0.8*b hochgerechnet auf 1.0*b
Begriffe für Stirnräder nach DIN 868, 3960, 3998

Profile and helix checking according to VDI/VDE 2612
Listed tolerance data for F_β and $f_{H\beta}$ refers to the total face width in the meas. dia. d_M
Tooth trace testing area Lβ = 0.8*b calculated to 1.0*b
Terms of the tooth system according to DIN (German Industrial Standards) No. 868, 3960, 3998

Vorbearbeitungsdaten siehe Verzahnungsblatt Vorbearbeitung gleicher Nr.
For pre-machining dimensions, see gear data sheet same number

Wkz-Profil siehe Werkzeugdatenblatt Nr.
For Tooth profile, see tool data sheet number 250.1.4220.75

Der Verlauf der Profil- und Flankenlinie muss über den Messbereich stetig sein (ein- oder mehrfache Richtungsänderungen sind nicht zulässig)
The form of the profile and helix has to be continuous (one or more changes of directions are not allowed)

Buch.	Anz.	Änd.Nr.		Datum	Name
d	1	C007260	See change report	20170117	Cricenti
c	1	35978	See change report	20130515	Cricenti
b	2	35560	See change report	20111209	Cricenti
a	5	35392	See change report	13/05/2011	Cricenti

Verteiler:

Schutzvermerk nach DIN 34 beachten

GETRAG
GETRAG Getriebe- und Zahnradfabrik Hermann Hagenmeyer GmbH & Cie KG

Abbildungen sind unmaßstäblich.
Diagrams not to scale.

Ersatz für
Erstverwendung bei Getriebetype: 250.0.0004.16

Remark:

	Datum	Name
gez.	2011-03-23	Paaßen, Holger
gepr.		

Verzahnungsblatt Endkontrolle
Final Check Gear Data
Benennung:
Naming:
Gear 2nd

Zeichnungsnummer:
Drawing number:
250.1.4220.75

Design Release:	2017-01-10	Agapi Raidt
Function Release:	2017-01-16	Michael.Gierlatta
Geardata Release:	2017-01-17	Fabrizio Cricenti
Material Release:	2017-01-10	Agapi.Raidt
SAP Release:	2017-01-26	Hartmut.Kobald
Document Status:	approved	

Fuer Freigabeinformationen freihalten! KEEP FREE FOR RELEASE INFORMATIONS

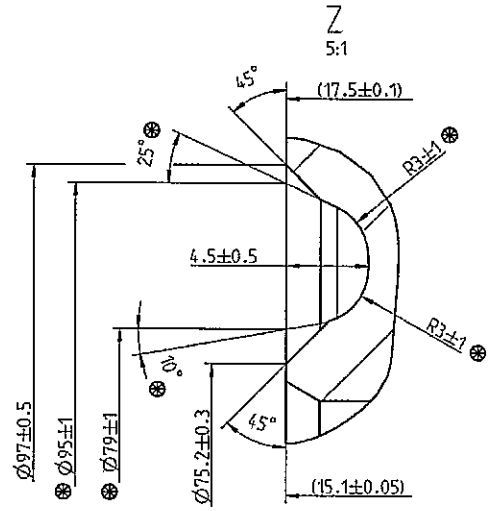

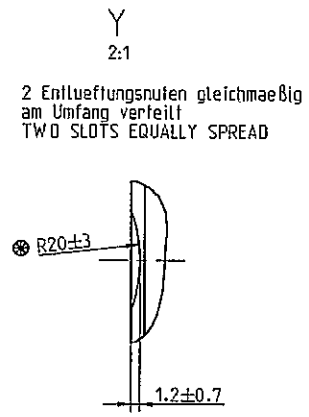

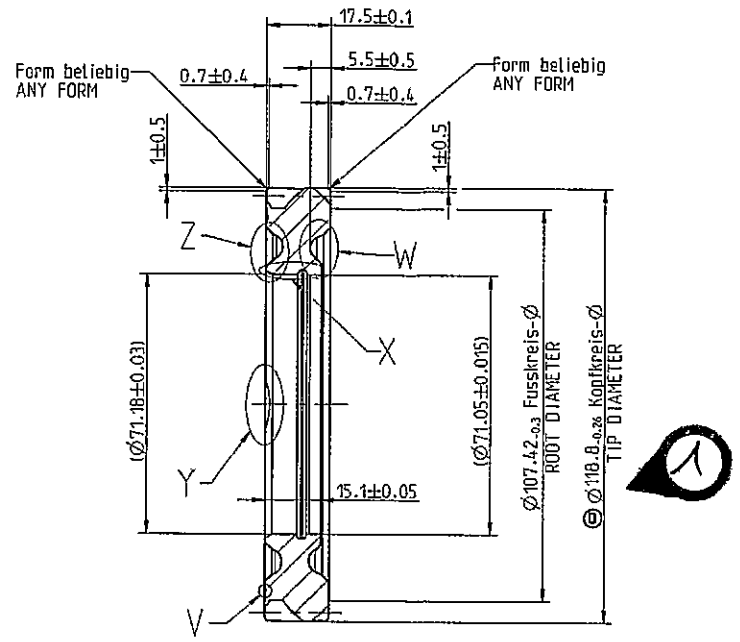

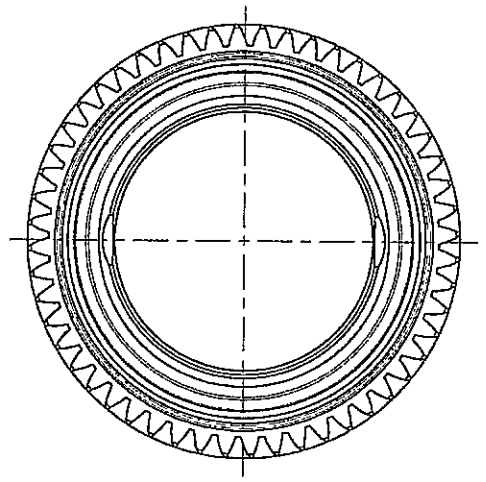

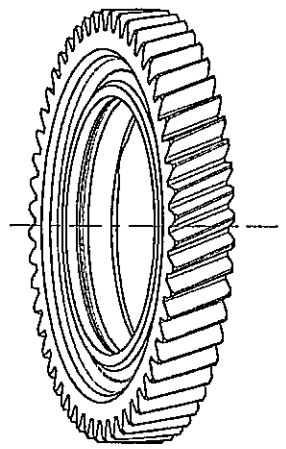

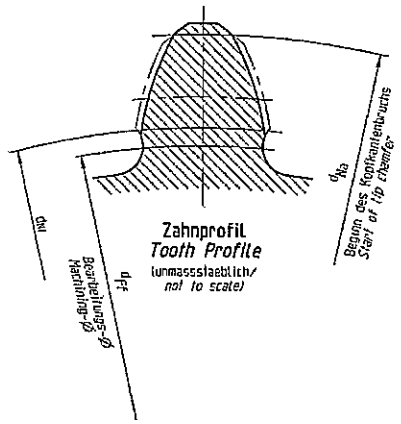

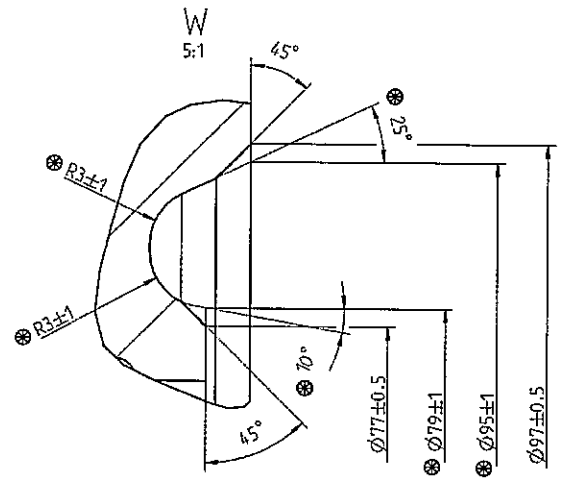

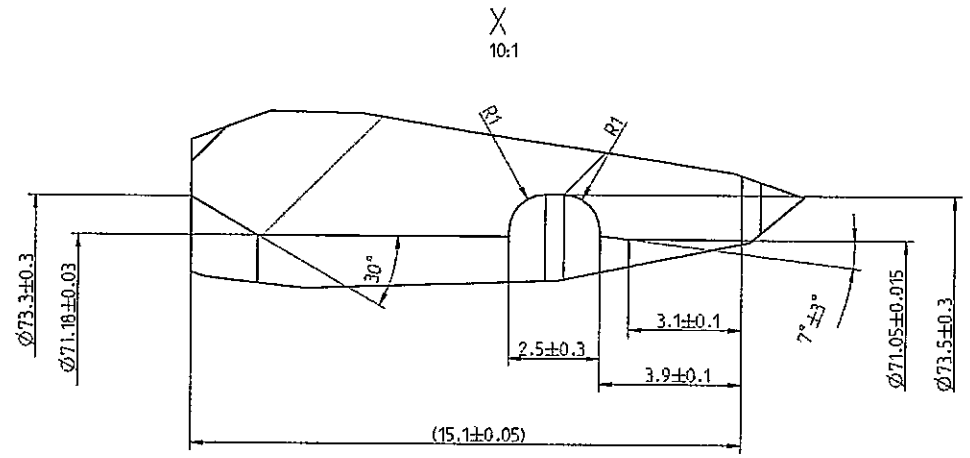

vorbearbeitet. Fertigmass ▲ (...)
siehe 250.1.4218.75 und 250.1.4276.75
PREMACHINED, FINISHED DIMENSION ▲ (...)
SEE 250.1.4218.75 AND 250.1.4276.75

Kanten an Laufverzahnungen \ *Tooth chamfers*
unmassstaeblich \ *not to scale*

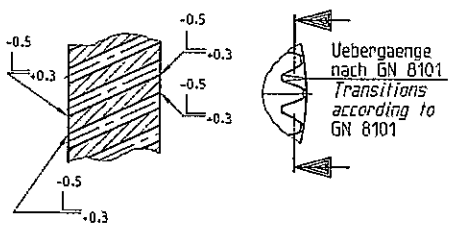

ⓐV
Optionale Erkennungsrille/OPTIONAL ID GROOVE
10:1

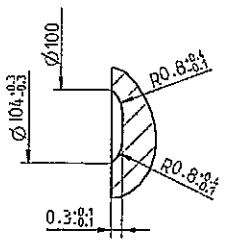

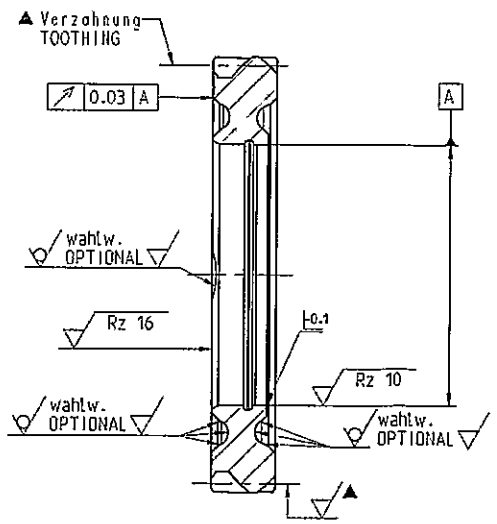

Rz 40

-0.3/-0.1

Aussenverzahnung / EXTERNAL GEAR		
Zahnwelle/ SPLINE DATA EXTERNAL		
Bezugsdurchmesser / REFERENCE DIAMETER d_B		
Modul / NORMAL MODULE m_n		2.000
Zahnezahl / NUMBER OF TEETH z		52
Eingriffswinkel / NORMAL PRESSURE ANGLE α_n		20.0°
Schraegungswinkel / HELIX ANGLE β		22.0°
Richtung / HAND OF HELIX		LEFT. links
Bezugsprofil / BASIC RACK		
Profilverschiebung/ADDENDUM MODIFICATION $x \cdot m_n$	Nennmass / NOMINAL	0.550
Qualitaet / GEAR TOOTH QUALITY DIN3961		7
Toleranzklasse / TOLERANCE CLASS		
Zahndicke / TOOTH THICKNESS s_n (Einzelmessung / GAGE DIMENSION)	effective max.	
Zahndicke / TOOTH THICKNESS s_n (Einzelmessung / ACTUAL)	max.	3.464
	min.	3.439
Messkugel-Ø / BALL DIA D_M		3.50
Pruefmass / MEASUREMENT OVER BALLS M_{dK} (Einzelmessung / ACTUAL)	max.	118.006
	min.	117.945

Naehere Angaben zur Verzahnung (nach dem Schweißen)
siehe Verzahnungsblatt gleicher Nummer
FURTHER GEAR DATA (AFTER WELDING) SEE
DATA SHEET SAME NUMBER

⊛ Rohteilgeometrie, keine Pruefmaße
RAW PART GEOMETRY, AS REFERENCE ONLY

Rohteilnummer/RAW PART NUMBER
250.1.4220.90 und/AND 250.1.4220.91

Haerteangaben siehe
Doppelrad 2./Rw. vst.
250.1.4218.75 und 250.1.4276.75
HEAT TREATMENT SEE
DOUBLE GEAR 2ND/REV CPL.
250.1.4218.75 AND 250.1.4276.75

GCG/TS 803001	0	<M>					
	0	▽					
GN 3010	0	<M>					
	0	<C>					
	0	<A>	b	1x	400260_MIP_1	VIEW MAIN: Kopfkreis-Ø/TIP DIAMETER Ø118.8-0.26 war/ist SS: Ø118.8-0.2	20170110
CAD Prof. Engineer			a	1x	400091_MIP_1	Ansicht V: Optionale Erkennungsrille hinzu/ VIEW V: OPTIONAL ID GROOVE ADDED	20160413
			--	--	35387	Spezifikationspruefgrad F erteilt SPECIFICATION MATURITY LEVEL F APPROVED	20110316

Massstab / SCALE: M: 1:1 (--)

Buchst. CHANGE INDEX	Anzahl NUMBER	Aend.-Nr. CHANGE REQUEST NO	Aenderung --nur mittels CAD zulaessig. FMEA ueberzuprueFen-- MODIFICATION --ONLY ALLOWED BY CAD; CHECK FMEA--	Datum DATE

Allgemeintoleranzen fuer Laengenmasse, Form und Lage ISO 2768 - mH gebrochene Kanten, Radien und Winkelmasse ISO 2768 - f
GENERAL TOLERANCES FOR LINEAR DIMENSIONS, FORM AND POSITION ISO 2768 - mH, CHAMFERS, RADII AND ANGULAR DIMENSIONS ISO 2768 - f

Informationen auf dieser Zeichnung sind ohne Angaben zu Verwendung und Freigabe unverbindlich.
INFORMATION ON THIS DRAWING PROVIDED WITHOUT OBLIGATION IF USAGE AND RELEASE ARE NOT SHOWN.

Auswertung der Durchmessermessung erfolgt nach der Gauss-Methode (arithmetischer Mittelwert)
EVALUATION OF THE DIAMETER MEASUREMENT IS CARRIED OUT ACCORDING TO THE GAUSS METHOD (ARITHMETICAL MEAN VALUE)

Form- und Lagetolerierung FORM AND POSITION TOLERANCES DIN ISO 1101	Toleranzen TOLERANCING ISO 8015	Oberflaechenangaben SURFACE TEXTURE DIN 4000	Werkstuecktanten BREAK EDGES ISO 13715

Werkstoff / MATERIAL: GLG805000-02_20MnCrS5

Halbzeug: SEMI-FINISHED: -

oelbenetzte Oberflaeche OIL WETTED SURFACE: 0 mm2

Gesamtoberflaeche SURFACE AREA: 34657 mm2

Masse MASS: 0.663 kg

Benennung / ITEM NAME: GEAR 2ND
Zahnrad 2. Gang

Artikel-Nr./ ITEM NO.: 2501422075
CAD-Modell: 2501422075

Blatt/SHEET 1 von/OF 1

Reifegrad MATURITY: F

Format SIZE: A1

Ersatz fuer SUBSTITUTE FOR: -

	DATUM/NAME DATE	CHECKED IN BY	CHECKED IN ON (DD.MM.YYYY hh:mm:ss)	VERSION
ZEICHN. / DRAWN	Angapi Raidt		30.01.2017 09:50:10	1
MODELL	Angapi Raidt		30.01.2017 09:50:10	1

GETRAG
Getriebe- und Zahnradfabrik Hermann Hagenmeyer GmbH & Cie KG
Schutzvermerk nach ISO 16016 beachten
PROTECTION PER ISO 16016

Document Revision: 20170110095308, printed on 2017-07-19 at 14:00 by Mirko.Vicenti