311664

GETRAG	Verzahnungsblatt	Z-Nr.: 251.6.1076.35	z = 43
	Aussen - Verzahnung	Remark: IIa	

Gegenrad:	./.	i 43 / 43	a ./.	Type: 251	Gang: Abtr.welle 1
		i /	a	Besteller: Renault	

z 43	m_n 1.000000	α 30 ° 0 ′ 0 ″	β 0 ° 0 ′ 0 ″	GERADE	
x -0.050	d 43.000	d_b 37.239	d_a 43.89 $_{-0.25}$	d_f 41.80 $_{-0.59}$	

Toleranzklasse	9	Zahndicke sn	1.590 ÷ 1.550
Gutlehre hat Priorität gegenüber Prüfung der Einzelabweichungen		Zahnweite Wk über k = 8 Zähne	
Zweifl.-Wälzabw. Fi ″	Einfl.-Wälzabw. Fi ′	fertig:	22.424 ÷ 22.389
Zweifl.-Wälzsprung fi ″	Einfl.-Wälzsprung fi ′	gestoßen: gefräst:	÷
Profil-Formabw. ffα	Profil-Winkelabw. fHα	geschliffen:	÷
Profil-Gesamtabw. Fα 0.021	Teilungs-Einzelabw. fp 0.017	Diam. Zweikugelm. MdK, DM = 2.00	
Eingriffsteilu.-Abw. fpe	Teilungssprung fu	fertig:	46.231 ÷ 46.167
Teilungs-Ges.abw. Fp 0.040	Teilungs-Span.abw. Fpk	gestossen: gefräst:	÷
Teilungs-Span.abw. Fpz/8	Rundlaufabw. Fr 0.050	geschliffen:	÷
Zahndickenschwa. Rs	Flankenl.-Formabw. ffβ	Nutzkreise dNa 43.64	dNf 41.94
Flankenl.-Winkelabw. fHβ	Flankenl.-Ges.abw. Fβ 0.011	Messstrecken ρdNa 11.38	ρdNf 9.65

Werkzeug	Bezugsprofil	DIN 5480	haP0 =	
Schleifscheibe	h_{aP0}	ρ_{aP0}	b	

Zahnwelle DIN 5480-W 44 x 1.00 x 43 x 9 v

Lehrenmaß sn max. eff. = 1.613

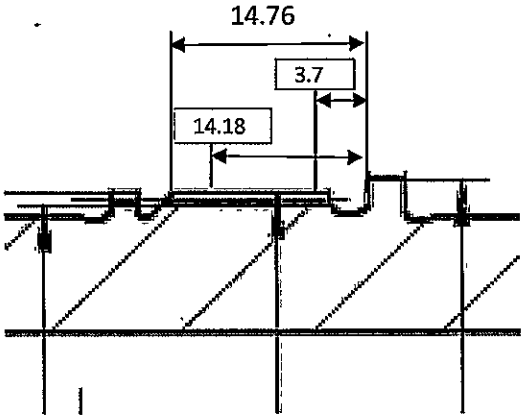

In Messebene 14.18 und 3.7 ρodNa min = 11.22 zulässig

Buchst.	Änd.-Nr.	Änderung	Datum	Name

VBL erstellt: CRICENTI Datum: 2015-12-04 Ersatz für:

Released by Fabrizio.Cricenti on 2015-12-04
Document Status: approved

GETRAG	Geardata-Sheet	D-No.: 251.6.1076.35	z = 43
	External gearing	Remark:	IIb

Mating gear: -	i 43 / 43	a	Type: 251	Speed: Abtr.welle 1	
	i /	a	Customer: Renault		

z 43	m_n 1.000000	α 30 ° 0 ′ 0 ″	β 0 ° 0 ′ 0 ″	STRAIGHT	
x -0.050	d 43.000	d_b 37.239	d_a 43.89 $_{-0.50}$	d_f 41.80 $_{-0.59}$	

Tolerance Class 9.3		Tooth thickn. sn 1.487 ÷ 1.442	
GO-GAGE takes priority over inspection of individual deviations		Base tangent length over 8 teeth	
Radial composite err. Fi ″	Tangent. comp. err. Fi ′	finished: 22.334 ÷ 22.295	
Rad. tooth to tooth comp. err. fi ″	Tang. tooth to tooth comp. err. fi ′	shaped: hobbed: ÷	
Profile form error ffα	Profile angle error fHα	shaved: ÷	
Total profile error Fα 0.023	Adjacent pitch err. fp	Measurement over 2 balls DM= 2.00	
Normal pitch error fpe	Diff. bet. adj. pitch. fu	finished: 46.065 ÷ 45.992	
Cumulative pitch error Fp	Cum. circ. pitch err. Fpk	shaped: hobbed: ÷	
Cumu. circ. pitch err. 1/8 extent Fpz/8	Radial run-out Fr 0.050	shaved: ÷	
Range of tooth thickn. error Rs	Longit. alignm. err. ffβ	usable diameter dNa 43.64	dNf 41.94
Tooth alignment err. fHβ	Total alignment err. Fβ 0.012	rad. of curvature ρdNa 11.38	ρdNf 9.65

Tool	Bezugsprofil	DIN 5480	haP0 =	
grinding wheel	h_{aP0}	ρ_{aP0}	b	

External Spline DIN 5480-W 44 x 1.00 x 43 x 9.3 h

GAGE DIMENSION sn max. eff. = 1.513

Ch.ind.	Ch. No.	Changes	Date	Name

VBL drawn: CRICENTI Date: 2015-12-04 Subst. For:

Released by Fabrizio.Cricenti on 2015-12-04
Document Status: approved

GETRAG	Geardata-Sheet	D-No.: 251.6.1076.35	z = 38
	External gearing	Remark: IIIa	

Mating gear:	./.	i 38 / 38	a ./.	Type: 251	Speed: OS1
		i /	a	Customer: RSA	

z	38	m_n	1.000000	α	30 ° 0 ′ 0 ″	β	0 ° 0 ′ 0 ″		STRAIGHT
x	0.450	d	38.000	d_b	32.909	d_a	39.89 $_{-0.25}$	d_f	37.80 $_{-0.59}$

Tolerance Class		9	Tooth thickn. sn	2.167	÷	2.127	
GO-GAGE takes priority over inspection of individual deviations			Base tangent length over 7 teeth				
Radial composite err. Fi ″		Tangent. comp. err. Fi ′	finished:	19.970	÷	19.935	
Rad. tooth to tooth comp. err. fi ″		Tang. tooth to tooth comp. err. fi ′	shaped: hobbed:		÷		
Profile form error ffα		Profile angle error fHα	shaved:		÷		
Total profile error Fα	0.021	Adjacent pitch err. fp	0.017	Measurement over 2 balls DM= 2.00			
Normal pitch error fpe		Diff. bet. adj. pitch. fu	finished:	42.148	÷	42.088	
Cumulative pitch error Fp	0.040	Cum. circ. pitch err. Fpk	shaped: hobbed:		÷		
Cumu. circ. pitch err. 1/8 extent Fpz/8		Radial run-out Fr	0.050	shaved:	÷		
Range of tooth thickn. error Rs		Longit. alignm. err. ffβ	usable diameter dNa	39.64	dNf	37.94	
Tooth alignment err. fHβ		Total alignment err. Fβ	0.011	rad. of curvature ρdNa	11.05	ρdNf	9.44

Tool	Bezugsprofil	DIN 5480		
grinding wheel	h_{aP0}	ρ_{aP0}	b	

External Spline DIN 5480-W 40 x 1.00 x 38 x 9 v

GAGE DIMENSION sn max. eff. = 2.190

da NON STANDARD

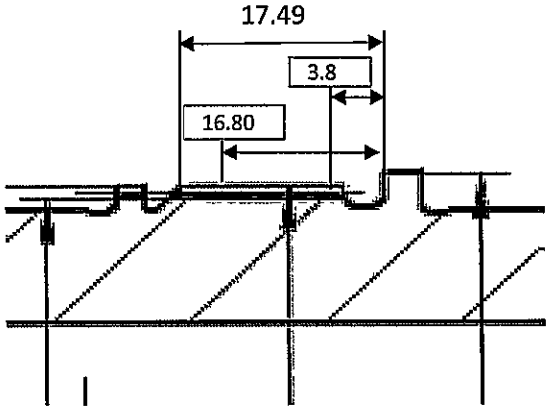

In measurement planes 3.8 und 16.80 podNa min = 10.89 allowed

Ch.ind.	Ch. No.	Changes	Date	Name

VBL created: CRICENTI Date: 2015-12-04 Subst. for:

Released by Fabrizio.Cricenti on 2015-12-04
Document Status: approved

GETRAG	Geardata-Sheet	D-No.: 251.6.1076.35	z = 38
	External gearing	Remark: IIIb	

Mating gear:	i 38 / 38	a	Type: 251	Speed: Abtr.welle 1
	i /	a	Customer: Renault	

z 38	m_n 1.000000	α 30 ° 0 ′ 0 ″	β 0 ° 0 ′ 0 ″	STRAIGHT
x 0.450	d 38.000	d_b 32.909	d_a 39.89 $_{-0.50}$	d_f 37.80 $_{-0.59}$

Tolerance Class	9.3	Tooth thickn. sn	2.064 ÷ 2.019
GO-GAGE takes priority over inspection of individual deviations		Base tangent length over 7 teeth	
Radial composite err. Fi ″	Tangent. comp. err. Fi ′	finished:	19.881 ÷ 19.842
Rad. tooth to tooth comp. err. fi ″	Tang. tooth to tooth comp. err. fi ′	shaped: hobbed:	÷
Profile form error ffα	Profile angle error fHα	shaved:	÷
Total profile error Fα 0.023	Adjacent pitch err. fp	Measurement over 2 balls DM= 2.00	
Normal pitch error fpe	Diff. bet. adj. pitch. fu	finished:	41.992 ÷ 41.923
Cumulative pitch error Fp	Cum. circ. pitch err. Fpk	shaped: hobbed:	÷
Cumu. circ. pitch err. 1/8 extent Fpz/8	Radial run-out Fr 0.050	shaved:	÷
Range of tooth thickn. error Rs	Longit. alignm. err. ffβ	usable diameter dNa	39.64 dNf 37.94
Tooth alignment err. fHβ	Total alignment err. Fβ 0.012	rad. of curvature ρdNa	11.05 ρdNf 9.44

Tool	Bezugsprofil	DIN 5480	haP0 =	
grinding wheel	h_{aP0}	ρ_{aP0}	b	

External Spline DIN 5480-W 40 x 1.00 x 38 x 9.3 h

GAGE DIMENSION sn max. eff. = 2.090

Ch.ind.	Ch. No.	Changes	Date	Name

VBL drawn: CRICENTI Date: 2015-12-04 Subst. For:

Released by Fabrizio.Cricenti on 2015-12-04
Document Status: approved

GETRAG	Geardata-Sheet	D-No.: 251.6.1076.35	z = 17
	External gearing	Remark:	

Mating gear:	./.	i 0 / 17	a ./.	Type: 251	Speed: OS1
		i /	a	Customer: RSA	

z	17	m_n	2.680000	α	20 ° 0 ′ 0 ″	β	24 ° 0 ′ 0 ″		LEFT
x	0.600	d	49.872	d_b	46.330	d_a	59.20 0.26	d_f	43.05 -0.32

Gear quality; Tolerance zone		Tooth thickn. sn	[5.338	÷	5.308]	
Test group acc. to DIN 3961of Aug. 78		Base tangent length over 4 teeth				
Radial composite err. Fi ″	Tangent. comp. err. Fi ′	finished:	[29.577	÷	29.548]	
Rad. tooth to tooth comp. err. fi ″	Tang. tooth to tooth comp. err. fi ′	shaped: hobbed:	29.681	÷	29.653	
Profile form error ffα	Profile angle error fHα	shaved:		÷		
Total profile error Fα	Adjacent pitch err. fp	Measurement over 2 balls DM= 4.50				
Normal pitch error fpe	Diff. bet. adj. pitch. fu	finished:	[58.044	÷	57.984]	
Cumulative pitch error Fp	Cum. circ. pitch err. Fpk	shaped: hobbed:	58.255	÷	58.196	
Cumu. circ. pitch err. 1/8 extent Fpz/8	Radial run-out Fr	shaved:		÷		
Range of tooth thickn. error Rs	Longit. alignm. err. ffβ	usable diameter	dNa 58.17	dNf	46.99	
Tooth alignment err. fHβ	Total alignment err. Fβ	rad. of curvature	ρdNa 17.59	ρdNf	3.92	

Tool	FRW - 329603	m_{n0} 2.607215	α_{n0} 14.8000 °	β_0 23.3090 °
grinding wheel	h_{aP0}	ρ_{aP0}	b	

FOR PREMACHINING ONLY (HARD CONDITION) !

Final measurement dimensions (gear errors and modifications) see final check gear data !

Correction dimensions for machining in hard and soft condition in accordance with final measurement dim. !

Root diam. (soft): df = 43.00 -0.23

Premachining with comma chip (soft): fHα = 15 µm

Measurement according to the tool data, fHα ca. 0 µm

Ch.ind.	Ch. No.	Changes	Date	Name

VBL created: CRICENTI Date: 2015-12-04 Subst. for:

Feedback soft - hard analysis necessary? yes X no

soft- hard analysis on date:

Released by Fabrizio.Cricenti on 2015-12-04
Document Status: approved

Released by Fabrizio.Cricenti on 2015-12-04
Document Status: approved

STIRNRAD / GEAR	außenverzahnt / external	Toleranzen der Verzahnung (DIN 3961 vom Aug. 1978) gültig für Werte am Einzelzahn / Tolerances of gearing (DIN 3961 of Aug. 1978) valid for values at individual tooth (8)				
Zähnezahl z / Number of teeth	17		linke Fl. / left flank	rechte Fl. / right flank		
Modul m_n / Normal module	2.680000	Profil-Formabweichung $f_{f\alpha}$ / Profile form error	0.004		Eingriffsteilungs-Abweich. f_{pe} / Normal pitch error	0.014
Eingriffswinkel α_n / Normal pressure angle	20° 0' 0"	Profil-Gesamtabweichung F_α / Total profile error			Teilungs-Einzelabweichung f_p / Adjacent pitch error	0.014
Schrägungswinkel β / Helix angle	24° 0' 0"	Profil-Winkelabweichung $f_{H\alpha}$ / Profile angle error	0.000 ± 0.012	0.000 ± 0.012	Teilungssprung f_u / Diff. bet. adjacent pitches	0.018
Steigungsrichtung / Hand of helix	LINKS	Flankenl.-Winkelabweich. $f_{H\beta}$ / Tooth alignment error	0.030 ± 0.013	0.000 ± 0.013	Teilungs-Summenabweich. F_{pk} / Cumulative circ. pitch error	
Profilverschiebungsfaktor x / Addendum modification coeff.	0.600	Flankenl.-Gesamtabweich. F_β / Total alignment error			Rundlaufabweichung F_r / Radial run-out	0.032
Teilkreisdurchmesser d / Pitch diameter	49.872	Flankenl.-Formabweich. $f_{f\beta}$ / Longitudinal alignment err.	0.004		Zahndickenschwankung R_s / Range of tooth thickn. error	
Kopfkreisdurchmesser d_a / Outside diameter	59.20 +0.26	Teilungs-Gesamtabweich. F_p / Cumulative pitch error	0.040			
Kopfnutzkreisd. theo. max. d_{Na} / Tip diam. usable theo.	58.75	Einf.-Wälzabweichung F_i' / Tangential composite error			Zweifl.-Wälzabweichung F_i'' / Radial composite error	0.036
Kopfnutzkreisd. theo. min. d_{Na} / Tip diam. usable theo.	58.32	Einflanken-Wälzsprung f_i' / Tang. tooth to tooth comp. err.			Zweifl.-Wälzsprung f_i'' / Radial tooth to tooth comp. err.	0.014
Fußkreisdurchmesser d_f / Root diameter	43.05 -0.32	Radbreite im Meßkreis d_M b / Facewidth in meas. diam.	33.98		Meßkreis Krümmungsradius ρ_{dM} / Radius of curvature meas. diam.	9.94
Fußnutzkreisdurchmesser d_{Nf} / Root diameter usable	46.72					
Grundkreisradius r_b / Base circle radius	23.165					
Grundkreisdurchmesser d_b / Base diameter	46.330					
Normalzahndicke max. s_n / Normal tooth thickness	5.338					
Normalzahndicke min. s_n / Normal tooth thickness	5.308					
Meßzähnezahl k / Number of teeth spanned						
Zahnweite max. W_k / Base tangent length						
Zahnweite min. W_k / Base tangent length						
Meßkugeldurchmesser D_M / Ball diameter	4.5000					
Diam. Zweikugelmaß max. M_{dK} / Measurement o. balls	58.044					
Diam. Zweikugelmaß min. M_{dK} / Measurement o. balls	57.984					
Verdrehflankenspiel theo. / Circumferential backlash	0.111 / 0.214					

left fl. = drive in forwards direction

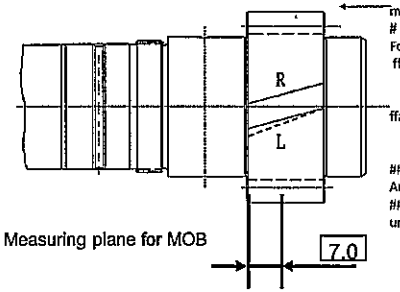

Measuring plane for MOB

Hondurchmesser = 46.39 -0.30 ≡ 1.18
honing diameter

#Flanken- und Profilformabweichung ffa und ffb ausgewertet mit Fourier. Auswertung bis 30. Ordnung
Flank and profile fomr errors ffa and ffb evaluated using Fourier. Evaluation untill 30th order
ffb n0 = ?
K = ?
R = ?
ffa n0 = ?
K = ?
R = ?
Teilungs-Einzelabweichung fp ausgewertet mit Fourier. Auswertung bis 20. Ordnung
Adjacent pitch error evaluated using Fourier. Evaluation untill 20th order
n0 = ?
K = ?

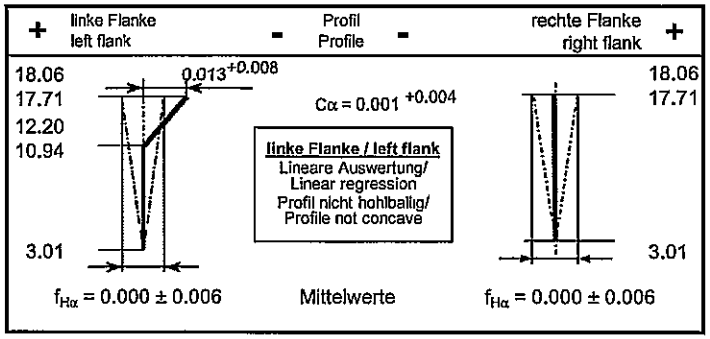

* Schreibbeginn
* Start of checking

Ø = 46.39 -0.30 ≡ 1.18

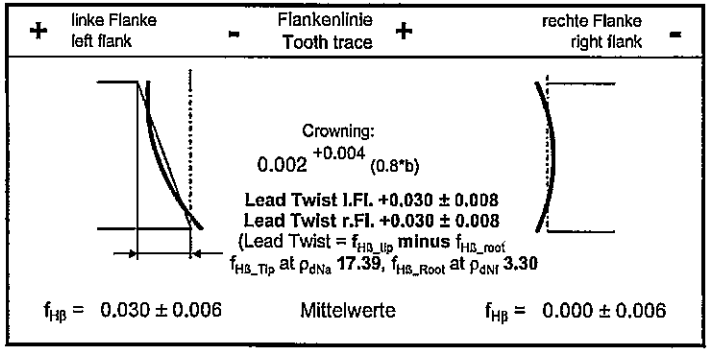

* ffαf (zwischen dNf und dem Schreibbeginn ds) max ffα/2, jedoch 0.003 zulässig
* ffαf (between dNf and start of checking ds) max ffα/2, 0.003 allowable.

Profil- und Flankenlinienmessung nach G_808006 und VDI/VDE 2612
Flankenlinienprüfbereich Lβ = 0.8*b hochgerechnet auf 1.0*b
Begriffe für Stirnräder nach DIN 868, 3960, 3998

Profile and helix checking according to G_808006 and VDI/VDE 2612
Tooth trace testing area Lβ = 0.8*b calculated to 1.0*b
Terms of the tooth system according to DIN (German Industrial Standards) No. 868, 3960, 3998

Vorbearbeitungsdaten siehe Verzahnungsblatt Vorbearbeitung gleicher Nr.
For pre-machining dimensions, see gear data sheet same number

Wkz-Profil siehe Werkzeugdatenblatt Nr. 251.6.1076.35
For Tooth profile, see tool data sheet number

Buch.	Anz.	Änd.Nr.		Datum	Name

Verteiler:

Schutzvermerk nach ISO 16016 beachten
Protection per ISO 16016

GETRAG
GETRAG Getriebe- und Zahnradfabrik Hermann Hagenmeyer GmbH & Cie KG

Abbildungen sind unmaßstäblich.
Diagrams not to scale.

Ersatz für
Erstverwendung bei Getriebetype: 251

Remark:

	Datum	Name
gez.	04.12.2015	Cricenti, Fabrizio
gepr.		

Verzahnungsblatt Endkontrolle
Final Check Gear Data
Benennung:
Naming:
OS 1

Zeichnungsnummer:
Drawing number:
251.6.1076.35