The framed rubrics with bold lines must be completed by freight carriers

1 Sender (name, address, country)
Expéditeur (nom, adresse, pays)

MAGNA

Magna PT B.V. & Co. KG
Hermann-Hagenmeyer-Str. 1, 74199 Untergruppenbach

INTERNATIONAL CONSIGNMENT
LETTRE DE VOITURE INTERNATIONALE

This carriage is subject notwithstanding any clause to thecontary, to the Convention on the Contact for the International Carriage of goods by road (CMR)

Ce Transport est soumis, nonobstant toute clause contraire, a la convention relative au contract de transport international de marchandise par route (CMR)

2 Consignee (name, address, country)
Destinataire (nom, adresse, pays)

VALMET AUTOMOTIVE Oy
AUTOTEHTAANKATU 14
FI-23500 UUSIKAUPUNKI

16 Carrier (name, address, country)
Transporteurs (nom, adresse, pays)

IB CARGO

3 Place of delivery of the goods (place, country)
Lieu prévu pour la livraison de la marchandise

Place / Lieu: **UUSIKAUPUNKI**

Country / Pays: **Finnland**

17 Successive carriers (name, address, country)
Transporteurs successifs (nom, adresse, pays)

DVI TRUCK SRL
Via Montali, 4 - Cell. 3884646883
42020 San Polo d'Enza (RE)
Cod.Fisc./P.Iva 03010960353
REA RE-333052 - Iscr.Albo RE4526048B

4 Place of receipt of the goods
Lieu et date de la prise en charge de la machandise

Magna PT S.p.A.
Via dei Ciclamini 4 70026
Modugno

Place / Lieu: **Modugno (BARI)**

Date / Date: **09.04.2024**

18 Carrier's reservations and observations
Réserves et observations des transporteurs

5 Attached documents
Documents annexès

Warenbegleitschein-Nr.: 305604

6 Marks and numbers / Marques et numéros
7 Number of packages / Nombre des colis
8 Method of packaging / Mode d'emballage
9 Nature of the goods / Nature de la marchandise
10 Statistic number / No. Statistique
11 Gross weight kg / Poids brut kg
12 Volume m³ / Cabage m³

Del.N/INV.	Reference	Cust./Int Part N.	Qty	UoM	No.Boxes	HU Description	Total/Net Wt.
7317565		A7003704000 2510001744-002	112	PC	14	Rack Daimler DCT300	10.325,280 7.889,280
					Total Boxes: 14		Total Wt.Kg/Net Wt.KG 10.325,280/7.889,280

The framed rubrics with bold lines must be completed by freight carriers including 21 + 22

Ref to Nr.9 / Nom voit / No 9	Fees label number / Numéro d'optiquatto	UN Number / Numéro UN	Packaging Group / Group d'emballage

19 To be paid by / A payer par

	Sender / L'expediteur		Currency / Monnaie		Consignee / Le destinataire	
Freight/Prix de transport						
Reduction/Réductions						
Subtotal/Solde						
Surcharges/Suppléments						
Incidental expenses/Frais						
Accessoires						
Various/Divers +						
Total to pay / Total a payer						

13 Sender's instructions (Customs and other formalities)
Instruction de l'expediteuer (formalites douanières et autres)

Container No:

Seal No:

14 Reimbursement/Remboursement

15 Directions as to freight payment
Prescription affranchissement

Free / Franko
Not free / Non Franco: **Free carrier**

20 Special agreements
Conventions particulières

21 Printed on
Etablie a: **Modugno (BARI)** **09.04.2024**

22
In nome e per conto del mittente
MAGNA
Via dei Ciclamini,4
70026 Modugno (Bari)
Signature and stamp of the sender
Signature et timbre de l'expéditeur

23
DVI497
DVI TRUCK SRL
Via Montali, 4 - Cell. 3884646883
42020 San Polo d'Enza (RE)
Cod.Fisc./P.Iva 03010960353
REA RE-333052 - Iscr.Albo RE4526048B
Signature and stamp of the carrier
Signature et timbre de l'transporteur

24 Goods received / Réception des marchandises on/le _____ 20____
Date / Date

Signature and stamp of the consignee
Signature et timbre du destinataire

To be completed on the senders own responsibility 1 - 15

25 Information to determine the tariff removal with border crossings

From	To	km

Palett sender / Expediteur des palettes

Type	Number	No exchange	Exchange
Euro-Pallet			
Box paller			
Simple paller			

Palett receiver / Destinataire des palettes

Type	Number	No exchange	Exchange
Euro-Pallet			
Box paller			
Simple paller			

26 Carriers contractor

27	Off. Characteristic	Load capacity in KG
Car		
Trailer		

Receiver confirmation / date / signature

Driver confirmation / date / signature

Used Gen Nr

☐ National ☐ Bilateral ☐ EG ☐ CEMT

ADI 06.07

VALMET AUTOMOTIVE Oy
WERK 601
ABLADESTELLE KA
AUTOTEHTAANKATU 14
FI-23500 UUSIKAUPUNKI
FINNLAND

Delivery no. / Date:	7317565 / 09.04.2024
Purch. ord. no.:	5500001327
Purch. ord. Date:	03.05.2023
Supplier's no.:	16722084E
Order no. / Date:	30026123 / 09.05.2023
Customer no.:	10006320
Consignee:	30007879
Packager Int. Cons.:	
	01 Serie
Person in charge:	De-Tullio, Gina
Tel. no. / Fax:	

loading station: KA

Delivery note

Weights (gross/net)
Gross weight 10.325,280 KG Net weight 7.889,280 KG

373523

Item	Material Description	Quantity	Weight
000010	2510001744-002 Transmission System 7DCT300 Daimler M282 Customer article number: A7003704000	112 PC	7.889,280 KG

Item	Material Description	Quantity	Weight
	Serial no.:	(700370400010981816, 700370400010981817, 700370400010981819 - 700370400010981822, 700370400010981824, 700370400010981827 - 700370400010981830, 700370400010981832 - 700370400010981835, 700370400010981838, 700370400010981851, 700370400010981859, 700370400010981861 - 700370400010981864, 700370400010981867 - 700370400010981869, 700370400010981871 - 700370400010981873, 700370400010981876, 700370400010981879, 700370400010981882, 700370400010981886, 700370400010981887, 700370400010981890, 700370400010981894, 700370400010981898, 700370400010981942, 700370400010981945, 700370400010981946, 700370400010981951 - 700370400010981954, 700370400010982088 - 700370400010982091, 700370400010982795, 700370400010982807, 700370400010982842, 700370400010982849, 700370400010982852, 700370400010982856 - 700370400010982858, 700370400010982872, 700370400010982875, 700370400010982880, 700370400010982884 - 700370400010982892, 700370400010982894 - 700370400010982910, 700370400010982912, 700370400010982914 - 700370400010982921, 700370400010982923 - 700370400010982926, 700370400010982928, 700370400010982929, 700370400010982954, 700370400020448853, 700370400020448868 - 700370400020448870, 700370400020449114, 700370400020449115, 700370400020449117, 700370400020449120, 700370400020449123, 700370400020449124, 700370400020449126, 700370400020449132)	
900001	TBA-500111 Rack Daimler DCT300	14 PC	2.436 KG

terms of dispatch: 03 Truck Forwarder

terms of delivery: FCA VAT Warehouse Modugno (BA)

Rotondo, Giuseppe

Da: Rotondo, Giuseppe
Inviato: venerdì 5 aprile 2024 09:38
A: Bruno, Maria-Giovanna; Miglietta, Nicola; Fiorentino, Ivana
Oggetto: I: Shipment plan awaiting confirmation for 09.04.2024.

Confermato 16.30

Giuseppe R

Trailer no. 1 pickup at 16:30

Trailer 1

Loading Length	Loading Meters	Weight
5.40 m	4.60 m	10542.0 kg

DEF-MT13 2.7.18 (Build 110)

A0 - VF18554, 1.35x1.2x1.2m 753.0kg

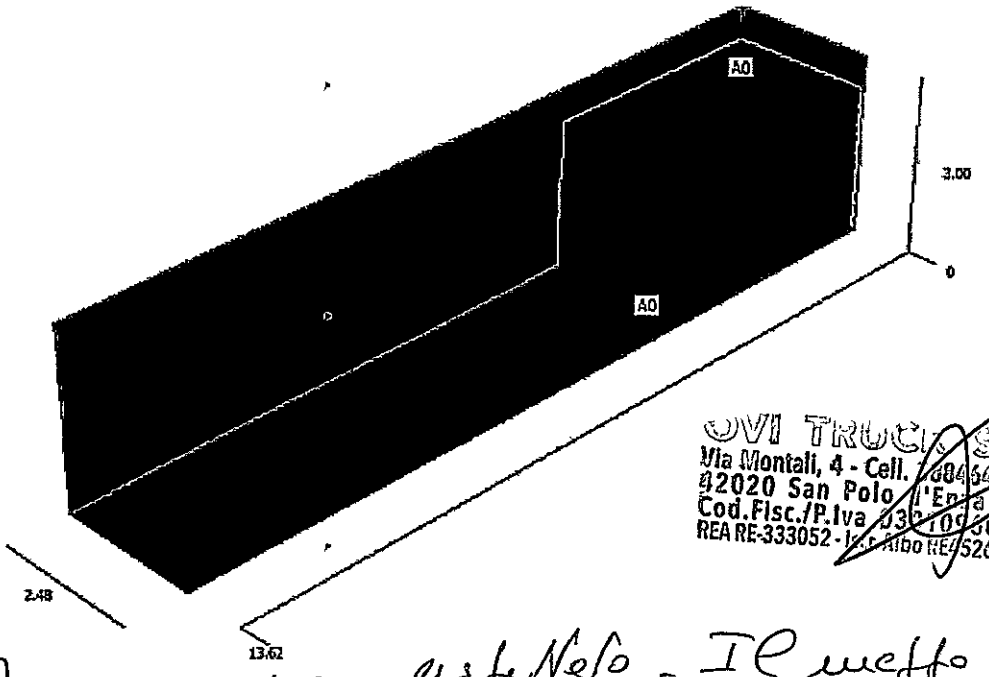

OVI TRUCK SRL
Via Montali, 4 - Cell. 3884646883
42020 San Polo d'Enza (RE)
Cod.Fisc./P.Iva 03010960353
REA RE-333052 - Iscr. Albo RE452604BP

Piano di carico non rispettato. Il mezzo è arrivato con la parte anteriore CARICA. TRACK sono stati ubicati nella parte posteriore in accordo con l'autista.

Da: do-not-reply@valmet-automotive.com <do-not-reply@valmet-automotive.com>
Inviato: venerdì 5 aprile 2024 02:07

OVI TRUCK SRL
Via Montali, 4 - Cell. 3884646883
42020 San Polo d'Enza (RE)
Cod.Fisc./P.Iva 03010960353
REA RE-333052 - Iscr. Albo RE452604BP